A11100 992809

NAT'L INST OF STANDARDS & TECH R.I.C.

A11100992809

Symposium on Undergr/Underground heat an
TA435 .U58 V66;1975 C.1 NBS-PUB-C 1975

NBS BUILDING SCIENCE SERIES 66

U.S. DEPARTMENT OF COMMERCE / National Bureau of Standards

Underground Heat and Chilled Water Distribution Systems

TA
435
.U58
NO. 66
1975
c. 2

NATIONAL BUREAU OF STANDARDS

The National Bureau of Standards [1] was established by an act of Congress March 3, 1901. The Bureau's overall goal is to strengthen and advance the Nation's science and technology and facilitate their effective application for public benefit. To this end, the Bureau conducts research and provides: (1) a basis for the Nation's physical measurement system, (2) scientific and technological services for industry and government, (3) a technical basis for equity in trade, and (4) technical services to promote public safety. The Bureau consists of the Institute for Basic Standards, the Institute for Materials Research, the Institute for Applied Technology, the Institute for Computer Sciences and Technology, and the Office for Information Programs.

THE INSTITUTE FOR BASIC STANDARDS provides the central basis within the United States of a complete and consistent system of physical measurement; coordinates that system with measurement systems of other nations; and furnishes essential services leading to accurate and uniform physical measurements throughout the Nation's scientific community, industry, and commerce. The Institute consists of a Center for Radiation Research, an Office of Measurement Services and the following divisions:

Applied Mathematics — Electricity — Mechanics — Heat — Optical Physics — Nuclear Sciences [2] — Applied Radiation [2] — Quantum Electronics [3] — Electromagnetics [3] — Time and Frequency [3] — Laboratory Astrophysics [3] — Cryogenics [3].

THE INSTITUTE FOR MATERIALS RESEARCH conducts materials research leading to improved methods of measurement, standards, and data on the properties of well-characterized materials needed by industry, commerce, educational institutions, and Government; provides advisory and research services to other Government agencies; and develops, produces, and distributes standard reference materials. The Institute consists of the Office of Standard Reference Materials and the following divisions:

Analytical Chemistry — Polymers — Metallurgy — Inorganic Materials — Reactor Radiation — Physical Chemistry.

THE INSTITUTE FOR APPLIED TECHNOLOGY provides technical services to promote the use of available technology and to facilitate technological innovation in industry and Government; cooperates with public and private organizations leading to the development of technological standards (including mandatory safety standards), codes and methods of test; and provides technical advice and services to Government agencies upon request. The Institute consists of a Center for Building Technology and the following divisions and offices:

Engineering and Product Standards — Weights and Measures — Invention and Innovation — Product Evaluation Technology — Electronic Technology — Technical Analysis — Measurement Engineering — Structures, Materials, and Life Safety [4] — Building Environment [4] — Technical Evaluation and Application [4] — Fire Technology.

THE INSTITUTE FOR COMPUTER SCIENCES AND TECHNOLOGY conducts research and provides technical services designed to aid Government agencies in improving cost effectiveness in the conduct of their programs through the selection, acquisition, and effective utilization of automatic data processing equipment; and serves as the principal focus within the executive branch for the development of Federal standards for automatic data processing equipment, techniques, and computer languages. The Institute consists of the following divisions:

Computer Services — Systems and Software — Computer Systems Engineering — Information Technology.

THE OFFICE FOR INFORMATION PROGRAMS promotes optimum dissemination and accessibility of scientific information generated within NBS and other agencies of the Federal Government; promotes the development of the National Standard Reference Data System and a system of information analysis centers dealing with the broader aspects of the National Measurement System; provides appropriate services to ensure that the NBS staff has optimum accessibility to the scientific information of the world. The Office consists of the following organizational units:

Office of Standard Reference Data — Office of Information Activities — Office of Technical Publications — Library — Office of International Relations.

---

[1] Headquarters and Laboratories at Gaithersburg, Maryland, unless otherwise noted; mailing address Washington, D.C. 20234.
[2] Part of the Center for Radiation Research.
[3] Located at Boulder, Colorado 80302.
[4] Part of the Center for Building Technology.

Underground Heat and Chilled Water Distribution Systems

NBS Building Science Series, no. 66.

NATIONAL BUREAU OF STA...
APR 20 1976
TA 435
.U58
no. 66
1975
c. 2

Proceedings for the Symposium
on Underground Heat and Chilled
Water Distribution Systems

Held in Washington, D.C.
November 26-27, 1973

Edited by

Tamami Kusuda

Center for Building Technology
National Bureau of Standards
Washington, D.C. 20234

Sponsored by

Building Research Institute,
National Bureau of Standards,
ASHRAE National Capital Chapter,
and
Association of Physical Plant Administrators

U.S. DEPARTMENT OF COMMERCE

NATIONAL BUREAU OF STANDARDS, Richard W. Roberts, *Director*

Issued May 1975

Library of Congress Cataloging in Publication Data

Symposium on Underground Heat and Chilled Water Distribution Systems. Washington, D.C., 1973.
Underground Heat and Chilled Water Distribution Systems

(NBS Building Science Series; 66)
"CODEN: BSSNBV."
Includes Bibliographical References.
Supt. of Docs. No.: C 13.29/2:66
1. Heating-Pipes—Congresses. 2. Heating from Central Stations—Congresses. 3. Air Conditioning from Central Stations—Congresses. 4. Refrigeration and Refrigerating Machinery—Congresses. I. Kusuda, Tamami, ed. II. Buidling Research Institute. III. Title. IV. Series: United States. National Bureau of Standards. Building Science Series; 66. TA435.U58 No. 66 [TH7643] 690'.08s [697'.54] 75-619005

National Bureau of Standards Building Science Series 66

Nat. Bur. Stand. (U.S.), Bldg. Sci. Ser. 66, 146 pages (May 1975)

CODEN: BSSNBV

U.S. GOVERNMENT PRINTING OFFICE
WASHINGTON: 1975

For sale by the Superintendent of Documents, U.S. Government Printing Office, Washington, D.C. 20402
(Order by SD Catalog No. C13.29:2/66). Price $2.10

Steering Committee

James C. Easter	Cummins-Wagner Company
B. H. Evans	Building Research Institute
William D. Goins	Department of the Air Force
Frank J. Powell	National Bureau of Standards

Program Committee

Henry Borger	Building Research Advisory Board
James C. Easter	Cummins-Wagner Company
Ben H. Evans	Building Research Institute
William D. Goins	Department of the Air Force
Francis A. Govan	York Research, Inc.
Walter T. Huber	Johns-Manville Corporation
T. Kusuda, Chairman	National Bureau of Standards
W. D. Richards	Ric-Wil, Inc.
R. J. Ruschell	The Ruschell Company
Edward Stoltz, Jr.	Johns-Manville Corporation
W. A. Schmidt	Veterans Administration

Supporting Companies

Johns-Manville Corporation

Ric-Wil, Inc.

American Gillsonite Company

American Corrosion Control Division

Midwesco Enterprises, Inc.
(Permanent Pipe Division)

Piping Insulators, Inc.

Foreword

The growing energy shortage is creating renewed interest in underground systems to provide effective distribution of heat from central plants. This is an area in which the National Bureau of Standards has for many years been developing basic engineering information, test methods, and evaluation criteria for insulated underground piping systems.

We, therefore, welcome the opportunity to sponsor this symposium on underground systems with the Building Research Institute, the American Society of Heating, Refrigerating and Air-Conditioning Engineers, and the Association of Physical Plant Administrators. We believe that publication of the Proceedings of the Symposium will advance the technology of underground distribution of energy and promote energy conservation.

Richard W. Roberts, Director
National Bureau of Standards

Preface

November 26-27, 1973

Washington, D. C. 20234

Recent energy shortages in the United States have brought new attention to the use of underground heat distribution systems as a means for distributing thermal energy from central plants to nearby load centers. Although acceptance of the underground heat distribution system for district heating and cooling in the United States has been extensive for college campuses, research laboratories, military bases and small communities, recent thinking is in the direction of expanding applications to city-size communities for effective utilization of waste heat from central electric-power generating plants, heat generating plants, heat generated at city incinerators, and large-scale solar collectors.

The purpose of the Symposium was to bring together a group of invited speakers and present a program that covered the current status of design, manufacturing, specification writing, installation, maintenance and life cycle cost analysis of underground heat distribution systems.

Approximately one hundred attendees representing local and state governments, industries, architectural and engineering firms and research laboratories participated in this two-day Symposium. The discussion revealed that there still exists the age-old problem of insulation failure due to ground water seepage and conduit corrosion, even among the most advanced designs of the underground systems. Valuable new information was provided for the heat transfer calculation, earth temperature data, corrosion inhibition of metallic pipes, performance of non-metallic pipes, specification on pipe insulation and auxiliary equipment.

The basic advantage of this kind of symposium is to exchange the experience of those concerned with the design, manufacturing and installation of underground heat distribution systems, so that the mistakes of others will not be repeated as well as that the success of some will be shared by all.

A significant aspect of the Symposium was that the preliminary status of new criteria being prepared by the Task Force of the Federal Construction Council was presented for the first time by L. Irvin of Naval Facilities Command, Chairman of the Task Force.

Mr. Irwin reported that the new criteria is basically a performance-type standard based upon realistic reappraisal of the old Tri-Service specification, new development on underground heat distribution products, more rigorous calculation methodology and classification of system pipes.

It was brought out during this Symposium that several novel schemes are possible by combining the underground central heat distribution system with the heat pump cycle, power generation cycle or a solar energy utilization cycle to attain excellent energy conservation design. It is believed that this Symposium and the availability of the Proceedings will stimulate new developments in energy distribution systems that will assist in alleviating the energy shortage.

Contents

	Page
Committee Membership	iii
Supporting Companies	iv
Foreword	v
Preface	vi
Contents	vii
Abstract	viii
Program	ix
Keynote Address Fred Hart	1
The Energy Situation and Central Plants Thomas R. Casberg	5
Economic Advantages of Central Heating and Cooling Systems John E. Mesko	9
Heat Transfer Studies of Underground Chilled Water and Heat Distribution Systems Tamami Kusuda	18
Design Criteria of Underground Heat and Chilled Water Distribution Systems for Corrosion Protection - J. H. Fitzgerald, III and K. J. Moody	42
Available Types of Underground Heat Distribution System Henry Borger	52
Design Criteria for Auxiliary Equipment for Underground Heating and Cooling Distribution Systems - Robert O. Couch	60
Federal Agency Specification for Underground Heat Distribution Systems Lee V. Irvin, Jr.	73
Specifications for an Underground Heated and Chilled Water System for Private Sector Contracts George S. Campbell	78
Fiberglass Reinforced Plastic Pipe in Underground Condensate Return Service at the Naval Weapons Center, China Lake, California - H. O. Anderson	88
Inter-building Heat Energy Distribution Systems: Growth, Operation, and Maintenance Experience - William L. Viar	102
Cathodic Protection Can Be an Effective Means for Preventing Corrosion on Underground Metallic Structures - Raymond G. Young	116
Operation and Maintenance of Steel Conduit Systems R. J. Ruschell	120
Experience with Central Heat Distribution Systems in Cold Regions Wayne Tobiasson	122

Abstract

This publication contains the keynote address and all the technical papers presented during the Symposium on Underground Heat and Chilled Water Distribution Systems, which was held on November 26 and 27, 1973 in Washington, D. C.

The Symposium was sponsored jointly by the National Bureau of Standards, the National Capital Chapter of the American Society of Heating, Refrigerating and Air-Conditioning Engineers, the Building Research Institute and the Association of Physical Plant Administrators.

The subject matter covered in the papers includes energy, economics, design criteria, heat transfer, corrosion protection, specification, operation, and maintenance related to underground pipes.

Key Words: Corrosion of underground pipes; district heating; hot and chilled water systems; insulation of underground pipes; specifications for underground systems

Monday, November 26

10:00	INTRODUCTION	Joseph A. Rorick, Chairman Building Research Institute
10:10	KEYNOTE ADDRESS	Fred Hart, Commissioner of Air Resources Environmental Protection Agency, New York
10:30	WHY CENTRAL SYSTEMS? Moderator:	Dr. Tamami Kusuda, Senior Mechanical Engineer Thermal Engineering Systems Section National Bureau of Standards
	The Energy Situation and Central Plants	Thomas R. Casberg, Staff Engineer, Office, Assistant Secretary of Defense, (Installations & Logistics), Deputy Assistant Secretary (Installations & Housing)
	Economic Advantages of Central Heating and Cooling Systems	John Mesko, Vice-President Pope, Evans & Robbins
1:30	DESIGN CRITERIA - I Moderator:	Francis A. Govan, President York Research Corporation
	Heat Transfer Studies of Underground Heat and Chilled Water Distribution Systems	Dr. Tamami Kusuda, Senior Mechanical Engineer Thermal Engineering Systems Section National Bureau of Standards
	Design Criteria of Underground Heat and Chilled Water Distribution System for Corrosion Protection	J. H. Fitzgerald III, and K. J. Moody The Hinchman Company
	Available Types of Underground Distribution Systems	Henry Borger, Program Manager Building Research Advisory Board Federal Construction Council
	Panel Discussion on Condensate Return Lines	
	Panel Members:	Ray W. Hardy, Product Manager Ameron Corrosion Control Division
		Robert B. Davidson, Product Manager Youngstown Sheet & Tube Corporation
		Arthur Cohen, Supervisor Standards & Engineering Copper Development Association, Inc.
	DISCUSSION	

Tuesday, November 27

9:00	DESIGN CRITERIA - II Moderator:	William D. Goins Department of the Air Force
	Design Criteria for Auxiliary Equipment for Underground Heating and Cooling Distribution Systems	Robert A. Couch, Vice President Ric-Wil, Inc.

	Federal Agency Specifications for Underground Heat Distribution System	Lee V. Irvin, Jr., Head Mechanical Specifications Naval Facilities Engineering Command
	Specifications for an Underground Heated and Chilled Water System for Private Sector Contracts	George Campbell George Campbell & Associates
	DISCUSSION	
10:45	INSTALLATION FORUM Moderator:	W. Donald Richards, Regional Manager Ric-Wil, Inc.
	Panel Members	George Knudsen, Manager Mechanical Engineering Buena Vista Engineering Company
		Herbert Mullenix, President North Brothers Corporation
	Fiberglass Reinforced Plastic Pipe in Underground Condensate Return Services at the Naval Weapons Center	H. O. Anderson, Mechanical Engineer PBS Engineering Department Naval Weapons Station China Lake, California
	DISCUSSION	
1:30	OPERATION AND MAINTENANCE Moderator:	James C. Easter Cummins-Wagner Company, Inc.
	Inter-building Heat Energy Distribution Systems: Growth, Operation and Maintenance Experiences	William L. Viar, Utilities Engineer University of Virginia
	Cathode Protection Can Be an Effective Means for Preventing Corrosion on Underground Metallic Structures	Raymond Young, Vice President Capital Corrosion Central Corporation
	Operation and Maintenance of Steel Conduit Systems	Robert J. Ruschell R. J. Ruschell Company
	Utility Tunnel Experience in Cold Regions	Wayne Tobiasson, Research Civil Engineer U.S. Army Cold Regions Research and Engineering Lab
	DISCUSSION	

KEYNOTE ADDRESS

UNDERGROUND CENTRAL HEATING AND COOLING DISTRIBUTION SYSTEMS

Fred C. Hart

Commissioner
Department of Air Resources
City of New York

The timing of this conference could not be more appropriate unless it had been held three years ago and we all had the wisdom to predict today's events. There is no need to stress the urgency of dealing positively and quickly with energy questions. There have been few domestic problems in the past decade which have commanded the public and media attention like the "energy crisis." Regrettably, there are few issues still so generally misunderstood.

Earlier this year most of us acknowledged that a potential fuel shortage existed which would fall in the range nationwide of between 200,000 and 500,000 barrels per day depending on the weather. Unfortunately, the Arab oil boycott adds a new element which cannot yet be quantified, but appears to be in the range of 2,000,000 barrels per day, or more than 10% of our daily winter usage.

Various steps have been taken to deal with the crisis. We all may travel slower, or not at all, go to work earlier, and be cooler before it's all over.

In New York City we have already been forced to step back from existing air quality standards. Last week we granted two variances, one to Con Edison to burn up to three million barrels of dirty oil and a second for suppliers of heating oil to offer for sale dirty oil to authorized buyers who are short of oil. At the same time, we denied Con Ed's request to burn coal. We had an experience last winter where 3% of our oil burned during the winter was higher sulfur, but this year the prospect is for much greater quantities to be burned. For example, we granted the variance this year in November compared to January last year and we already anticipate that Con Edison will burn 5% of the oil to be used this winter at higher sulfur content levels.

Much has been written about the steps being taken to conserve fuel and energy as a response to this crisis, but I'd like to address something else today, and that is the hysteria with which we react to crisis--which, more than anything else, may cause the greatest long term effects from this energy problem.

On Thursday, consumer and environmental groups severely criticized the methods used to solve the energy crisis, indicating that the full burden for solving the crisis has fallen on the consumer and the environment with very little on industry. While the passage of the Alaskan pipeline bill, the promotion of more strip mining and offshore drilling disturb me, I am not nearly as distressed with that as with the panic that surrounds all actions in Washington concerning energy these days.

In Congress, earlier this month, we had, day after day, the following kind of scenario:

- the full House debating and finally passing the Alaskan pipeline bill,
- the Senate Interior Committee marking up and passing the Emergency Energy Bill, which gives broad discretionary powers to the President,
- the Senate Commerce Committee debating the merits of year-round daylight savings time to promote some additional fuel savings,
- the Senate Public Works Committee holding hearings on the Clean Air Act to allow the burning of coal to relieve the demand for fuel oil.

Understanding the fuel supply and general energy situation is clearly one large challenge. It is extremely complicated--even having aspects of political intrigue that few, if any, can comprehend. Yet in a matter of days after the President declared a crisis, we were overriding carefully thought out decisions of the past--like the Alaskan pipeline. Certainly there is a problem of crisis proportion but not a problem that many have not warned of months and years ago. Two weeks ago, I testified before the Senate Public Works Committee on a bill which allowed the EPA Administrator to grant variances for the burning of coal in plants which previously burned oil. My testimony was not until late in the day and so it was possible for me to meet with legislative aides whom I have known over the three years I've spent in government. They each were concerned with legislation dealing with the energy crisis. The sense of urgency in the voices and manner was apparent. Anyone who wanted to could jot an amendment on the back of the envelope, explain it to the aide, and if the aide was satisfied, soon the appropriate committee would be amending its bill as you liked it to do.

This is not how government should function and I cannot imagine the damage to the various interests resulting from this hysteria. The only hope is that the groundwork previously laid by Senator Henry Jackson through his own preparation may make the most important bill--the Emergency Energy Bill--a workable law. On the other hand, the broad discretionary powers given to the executive branch is not very promising. Setting aside all political considerations, the executive branch's inability, to date, to establish an effective mandatory allocation program for diesel and light distillate fuels--a power given on October 16, 1973--is very troubling.

And I must put the blame for this hysteria and the results of it squarely with anyone who has had the chance to influence government and private industry in any aspect of energy and energy conservation.

You and I simply didn't do our job. Some will say that we told you so but you didn't listen. Rather, I say we didn't speak long enough or loud enough.

It will help us to recognize our past failures if we have any hope of doing the right thing now for the long term rather than moving from crisis to crisis. Whether it is in building

design, transportation systems design or in energy systems design, our watchword is efficiency. It really hasn't gotten across that often the design engineer and the environmentalist's goal is the same -- to prevent waste.

Let me give you an example. The day after testifying before the Senate Public Works Committee, I had the pleasure of being in Detroit and sitting next to the Executive Director of the Florida Energy Commission in an airport limousine on the way to a hotel. We had a lengthy discussion on the energy crisis, and this very knowledgeable man said that a deep concern of his state was the effect gas rationing would have on the leading industry in the state -- tourism. There was some irony in this pleading to me of his problems because he did not know that in New York City tourism is our second greatest industry and we were in the midst of a major community conflict over a plan to build a Convention Center aimed at retaining our place in the tourism industry. The argument most often raised against the Convention Center was the danger to public health from the transportation related air contaminants. But we have an answer in New York City -- a mass transit system second to none (in its ability to move many people, at least). It is a subway system which is being supplemented by buses, jitneys and taxi service. It is a system which limits the impact of air pollution because it is efficient. Somewhere back in the late 19th and early 20th century an efficient transportation system was laid out which, while not perfect, helps limit our problem of air pollution today. The man from Florida would have been ecstatic if he'd had this system to work with, either to cope with the energy crisis or solve air pollution problems.

The energy crisis may, in fact, have some benefits. Countries that have perpetual energy shortages, but yet have consistently high temperatures, cope with these dual problems. In the warm climates, buildings are painted in highly reflective colors to reduce the effect of solar radiation. Further, buildings are oriented to minimize the heating effect of the sun and to maximize the effect of natural prevailing winds to maintain indoor comfort--aimed at minimizing heat gain in the warm season and maximizing heat gain in the cooler season. They also lower light levels, dry clothes outdoors and often move around on foot or on bicycles. There is no question that these standards are an unacceptable change in life style for Americans today, but it is clear that we must pay some price for our past waste.

In New York City, because of our size, we have benefited by greater interest in efficiency in heating and cooling -- previously because there were economies. Now when we are confronted with the air pollution problem and the fuel/energy concern, we should be able to move ahead in this area. It requires, however, the cooperation of the local utility and other city agencies with the private sector.

We have two investigations currently underway in New York City. First, following the lead of the Union Electric Company in St. Louis, the development of a power or steam generating facility which uses refuse for fuel. Secondly, the development of a district steam heating plant and appropriate distribution system in a low income area of the city. Both projects have substantial value as air pollution control measures. The district heating plant may be the low cost solution to the air pollution problem in the South Bronx, where

landlords are unable to provide adequate equipment repairs to their boilers, such as are made in wealthier areas of the City. Most of you are familiar with the technology needed in these applications. But most of the past discussion for these systems has been centered around new sites and installation. Our problem is the retrofitting of a new technology into an old area -- replacing on-site boilers with the central plant. Just a few of the questions that come to mind are:

(1) Can the steam distribution be constructed cheaply, either by itself or combined with other elements in a utility core?

(2) Can the additional steam pressure be handled by the building's existing plumbing system?

I hope that you can address this problem over the next two days.

There are many areas covered on your agenda over the next few days that people wish had been implemented by this time. This concern on the part of the general public should spur your efforts. More than at any time, people want answers, want to see the alternatives, and want to see them implemented. As all politicians know, the public can set tough standards. Over the next few days, I hope we all can meet those standards.

The Energy Situation and Central Plant

Thomas R. Casberg

Office of the Secretary of Defense

Several optimistic myths regarding the energy situation in the United States are clarified by using factual data leading to an inevitable conclusion that there exists a real, rough and long lasting energy shortage.

The author stresses that the energy crisis demands engineers to forget yesterdays' data on building design practices and fuel cost, and to play an entirely new ball game that requires new thinking, a fresh approach, and a daring attitude. Several innovative approaches pertaining to central plant concept, such as on-site power generation, solar energy utilization, large scale heat pumps and energy storage are discussed.

Key Words: Central plant system; coal gasification; heat pump system; heat recovery and conservation system; nuclear fuel; on-site power generation system; petroleum problems

In 1901, the U.S. produced 61% of the world's supply of petroleum, and we exported 25% of the petroleum, and we exported 25% of the petroleum consumed by the rest of the world. By 1948, our exports had slowed to a mere trickle and in 1949, we became a petroleum importing nation. The down slope of the curve was quite plain for all to see, but we were too busy burning energy to worry about the source.

Recently the news media have been telling us loudly, plainly, and often that there is an energy shortage, problem, or crisis. Of course, a small band of us have been saying this for over four years, but it is always pleasant to know you have been right.

There are so many terms bandied around that the man in the street is confused, and so are a lot of engineers. Accordingly, before talking about the subject, a definition is in order. One wag has defined an energy crisis as that period when you can't fuel all of the people all of the time. That definition is an overly simplified one, but it does state the issue.

Years ago when I worked for Westinghouse, my boss had a little sign on his desk that read "If you can keep your head when all around you are in a panic, then you just don't understand the problem." Based on this criterion, I find that there are a great many professional people today that just don't understand the problem.

Even at this late date, there are too many engineers looking for the magic energy pill, the blinding flash of light, or the instantaneous technological breakthrough that will solve all the problems. I believe very deeply that it is time we take a look at the real world and eliminate the energy myths that unfortunately abound around us. It is most important to expose these myths, and begin the important work of solving the energy crisis.

Myth #1. Plenty of gas and oil in the ground. Oil companies just waiting for price to go up.

Fact: Intrastate gas in Texas is not under FPC control and people are fighting over it. Suppliers cannot meet the demand for unregulated gas. Union Carbide in Louisiana set new intrastate price record on November 14, $1 per Mega Btu plus non-interest bearing advance money for development of the field.

Myth #2. Canada has lots of gas and oil and all we need to do is build a few pipelines.

Fact: The National Energy Board of Canada put a stop to future gas exports over two years ago and is holding the line. Recently Canada increased the export tax on oil by 300%, and the press has reported that Canada is considering a reduction of the existing level of exports.

As you all know, the Arab Nations have halted exports of petroleum crude and products to the U.S. There are already comments from various sources that this is a temporary situation. The example is given that a similar embargo was placed against Great Britain in 1957 because of the Suez problem and that it was lifted in about six months. Whether this is another myth or not remains to be seen. How-

ever, let us for the moment accept this and look at the myths spawned by the assumption that the Arab Nations will resume exports to the U.S.

Myth #3. The Arabs have virtually inexhaustible supplies of oil and gas and all we have to do is build more tankers and haul more oil to the U.S.

Fact: Some members of the Organization of Petroleum Exporting Countries have already recognized the production mistakes made by the U.S. and have instituted conservation methods. Any close study must conclude that the OPEC nations are conservation minded.

Myth #4. The Arabs will sell us all the oil we want if we meet their price.

Fact: One OPEC nation, Libya, now has monetary reserves to enable it to live for 42 months at its current rate of government expenditures and its current rate of imports. By 1976 at least five more OPEC nations will be in this favorable position. Since they don't need money, what is the incentive to sell? The Arab income from oil in 1970 was $3 billion. In 1975 it will be $10 billion. It has been stated by James Atkins, former Director, Office of Fuels and Energy of Department of State, that given certain assumptions, the Arab income from petroleum by 1980 could be $30 billion annually -- not cumulative. The price of oil is rising rapidly, and therefore, oil in the ground is worth more to the OPEC nations on the long term than additional money received today.

As a side issue -- but an extremely important one -- consider the balance-of-payments situation if we import 12 million barrels of oil daily by 1980. This could mean a gold drain of up to $20 billion a year and remember that 1980 is only 6 years away. Consider the economic significance of a gold flow problem of this magnitude.

Myth #5. Alaska has tremendous reserves of oil and gas and all we need to do is build two big pipelines.

Facts: First, let's look at the pipeline problem. It has now been over four years and the pipelines haven't been started yet. As the picture appears today, it will be at least three or four years before product or gas reaches the U.S. market. Even then I'm afraid we are in for a real shock. This is going to be a very costly gas, at least 90 cents a mega Btu, and it could easily be more. Furthermore, it will satisfy only about 7 or 8% of the estimated 1980 demand.

Myth #6. Since nuclear electric utility plants will free up great amounts of oil and gas, all we have to do is slap a bunch of these around in the right places.

Facts: If we assume that nuclear plants would be acceptable from the environmental point of view, construction lead time would preclude nuclear plants as a short term answer. The real answer to nuclear electrical-generating plants is the breeder reactor. As you know, the present light water nuclear plants are extremely inefficient, wasting about 98% of the available energy. The breeder reactor will produce more fuel than it consumes, and therefore there is complete agreement that we must go to this type of plant as soon as possible. The AEC has decided that the LMFBR (Liquid Metal Fast Breeder Reactor) is the best answer at this time. A pilot plant of 500 mega watts costing $500 million is planned for a location on the Clinch River 25 miles from Knoxville. Already the cost has risen to $650 million. Construction is expected to start in about a year followed by a seven year construction and test period. On this basis, it will be 1990 before there are an adequate number of LMFBR plants to supply a significant portion of the nation's electric power.

Myth #7. There is enough oil in the oil shale in the western states to solve the petroleum problem.

Facts: Yes, but how do you get it out and what will it cost. Sizeable volumes of water are required for shale oil production and this could limit production. It has been estimated that under favorable conditions maximum production by 1985 could be 750,000 barrels per day requiring an investment of $4 billion. Cost (1970$) would be in the range of $5.60 to $5.80 per barrel.

Myth #8. We have an endless supply of coal and we can make oil and gas from this resource.

Facts: While good progress is being made in this effort, it would appear again that it will be 1985 before sufficient plants can be built to supply any significant amounts of Syngas or Synoil. Prices (1970$) for Syngas range from $0.90 to $1.20 per 1,000 cubic feet. Similarly, the cost (1970$) of Synoil is estamated in the range of $6.25 to $6.75/BBL. Most significant is the statement (page 49) by the National Petroleum Council that "Achievement of synthetic fuel production will require (a) massive government expenditures to provide the necessary water for minemouth synthetic plants in the relatively water deficient western states, as well as (b) coordinated action by government bodies to ensure the

legal availability of this water." The National Petroleum Council concludes that oil shale is expected to make only a minor contribution to the U.S. energy supply by 1985.

Myth #9. There is plenty of oil and gas in the ground and its easy to find.

Facts: Well, there probably is a lot of oil and gas in unproven areas, but it is not easy to find and it is not cheap. The days of spindle top in east Texas with the 50 Ft. wooden derricks punching through 2 - 3,000 feet of soft goo to hit oil are long gone. Today very costly steel rigs grind 20,000 feet looking for gas and the $100,000 hole can now cost $2 - $3 million. Much of the U.S. petroleum and gas future lies in the Gulf in depths from 60 to 300 feet or in the Atlantic at even greater depths. Such wells are tough and expensive.

In summary and to put it simply but bluntly, there is a real, rough energy shortage, and it will be with us for at least 15 years. So let us get on with the tasks facing the engineering administrators, the operations engineers and the design engineers. When you are short of Btu's, you use your engineering skills to stretch the Btu on hand, to squeeze the Btu you now have, and to make one Btu do the job where it required two Btu's before. To over simplify, the engineering profession is being called on to do more with less - a lot less.

In talking to engineers about the big job which must be done, I am both amazed and irritated at the general attitude. I find that thinking is geared to yesterday when it should be looking to tomorrow. Engineers talk about yesterday's building costs and fuel prices, they talk of the problems that used to occur with management, they talk of the "old days" when "everbody knew" that conservation methods wouldn't pay off and even if they did, the money boys wouldn't back such projects. Engineers still seem to like to quote the old slogan that "utilities projects are always last."

It must be clearly understood by all the profession that the energy crisis DEMANDS that we forget the past, DEMANDS that we throw out the old rules of thumb, and scuttle the old cliches. The energy crisis has created an entirely new ball game requiring new thinking, a fresh approach, and a daring attitude. Striking imagination and bold innovations must be the order of the day. This drastic change in attitude and approach to the problem is dictated by two critical points beyond the control of anyone. First, we must meet the cost issue head on. I don't care what area you talk about - residential, commercial or industrial - the cost of energy as reflected in utilities bills, based on 1972 costs, probably will double by 1978 and triple by 1985. Last January, I talked to a local engineering group and predicted $7 per bbl crude before 1974. Well, I was told I was off at least $1.50 a bbl and I guess the "yesterday engineers" were right, because a few weeks ago in Houston, spot purchases hit $8.76 a bbl. So I missed by over $1.50/bbl, but of course I was too low, not too high.

The simple truth is that viewing the long term cost situation, energy conservation is a money making proposition. Considering the rate of climb of inflation, even some of the "wild" conservation projects are certain to be self-amortizing over the long term, say 8 to 10 years.

The second critical point dicating a drastic new look, is the lack of energy itself. You can prattle on all day about economics, but such heated logic will not produce a single Btu. We are approaching a time when for many individual buildings the issue will be energy first and dollars second.

Chairman John Nassikas of the FPC has called for a new national ethic - energy conservation, and the engineering profession must respond. There are many conservation efforts known to the profession. To mention only a few, there is increased insulation - perhaps double present thinking, double or triple glazing of windows, less windows, better orientation to present a minimum building exposure to the sun to lower A/C costs, architectural shading to prevent direct solar exposure on windows, heat recovery wheels, run-around systems, heat pipes, waste heat recovery for heating domestic water or for reheat in air conditioning systems, water storage systems for both hot and cold water, double bundle condensers, false loading of compressors with stored water, water cooled luminaries, variable volume air conditioning, reduced ventilation, zero ventilation during non-occupancy periods, reuse of air through charcoal or other improved filtration, and so the list goes on. All these methods are here today, well within the state-of-the-art and many have been with us for years. We must use these and many more methods to stretch the Btu.

When we examine the conservation field, the potential of central plants looms big and bright. The first thing to attract us is the possibility of burning coal. Now I am fully cognizant of the difficulties facing the coal industry; nevertheless, the promise of a native fuel with a 200 year supply is most exciting. Certainly the coal industry difficulties are solvable, particularly if we assume temporary waivers of mining restrictions. It has been customary to place coal-fired heating plants (notice I said heating plants not power plants) out in industrial sections away from populated areas. This is really a 19th century approach because of fly ash problems. Today, we can control fly ash and we can control sulfur if we choose to pay for it. Accordingly, why can't we build heating plants "downtown" and reduce thermal transmission lines to a minimum. Perhaps we also need a new concept in buildings. Historically windows were needed for light and ventilation and we have long since learned to supply both services much better than nature does. Therefore, why not construct buildings as large blocks with very limited window area. The energy reduction would be most significant. Now the architect frowns at this, but in

describing the great glass monsters of the 50s and 60s, I can only think of the words, "Ice Palace." We need the central plant concept to burn refuse to produce steam. Perhaps we need to consider new heating plants as burning a combination refuse and coal to eliminate some of the problems in straight refuse burning plants.

The central plant concept permits realistic consideration of on-site power generation. These could be conventional steam turbine drive or prime mover driven or a combination. The total energy (T E) concept is found in about 700 U.S. installations today. Waste heat is captured and used for heating, domestic hot water, and air conditioning. But have we found all the ways to reclaim heat from these systems? Some would object to being forced to use absorption refrigeration because of the steam consumption, but recently we have had a successful double-effect machine brought on the market which is 30% more efficient.

Could we build a central TE plant and use the medium high temperature steam from the waste heat boiler to "cook" sewage in a large holding tank? The sewage would be treated and would be a heat sink for heating the building at night and for pre-heating incoming sewage the next day. Low temp steam exhausting from the "cooker" could still heat the building during the day or supply absorption refrigeration machines for air conditioning.

One of the drawbacks of solar energy recovery is the large area needed for the collectors. Again the possibility of a central plant using solar energy for booster heating is most interesting, since a central plant could provide the area need.

The concept of a large central-plant heat-pump deserves considerable attention. A water source, of course, would be best, but by using an air cooled screw machine, or the soon to be announced air-cooled centrifugal machine, large air-to-air efficient systems are certainly feasible and available. Of course, such heat pump concepts are closely allied to the use of double bundle condensers and heat storage systems. Prime mover driven heat pumps would provide additional energy from waste heat boilers.

Two weeks ago, engineering representatives of a leading combustion turbine manufacturer were in my office discussing new ways to get more out of the Btu. They are suggesting a combined cycle TE plant with an externally fired combustion turbine and a conventional steam turbine. The steam heat source could be a regular fired boiler, a fluidized bed using coal or refuse or a vortex incinerator. Included in the idea is to take the exhaust from the combustion turbine, heat it much higher in the boiler and running the hot gas through a second turbine with the exhaust heat put back in the boiler. Again, we see the possibilities offered by a central plant.

We need to greatly expand our thinking to encompass concepts and systems or even parts of systems to decrease energy consumption when using central plants as the basic energy source. For example, energy storage in the form of either hot or cold water offers many possibilities. One such idea is to receive and store the water during the non-occupancy period from 6 PM to 7 AM and to use the water during the occupancy period as a booster source for heating and air conditioning. Cold water storage could also be used for peak shaving purposes and permit smaller distribution lines. For central plants with power generation, there has been some problem with insufficient electrical load in the midnight to 6 AM period. Here again, water storage could solve this problem by utilizing electric boilers located in distant facilities. The boilers would operate at off peak times and maintain electric load while providing heat for the next day. Similarly, water chillers could provide and store chilled water for air conditioning the next day.

There can be no doubt that for many reasons we will see a greater use of the central plant concept, but these plants must be much more efficient than those we know from yesterday. Innumerable combinations of heat recovery and energy conservation systems and methods must be carefully evaluated and innovations must be kept in mind at all times. I am confident if we design and build our using facilities on a maximum energy conservation basis as we design and build our energy source plants on a minimum consumption basis, that we can do much to alleviate the long term energy crisis.

We have the equipment, the methods, the techniques, and surely we have the knowledge. Let us adopt a new national ethic - conservation. Let us all become skilled Btu hunters. Let us adopt for our motto "to operate tomorrow on the energy saved today."

Economic Advantages of Central Heating and Cooling Systems

John E. Mesko[1]

Pope, Evans and Robbins Incorporated
Consulting Engineers

Economic comparisons between central and local building heating and cooling plants have been prepared and analyzed. Inherent and basic economic advantages in the distribution of heat and cooling from a single central district plant, over those practically attainable from individual local building plants, are analyzed and presented graphically. Factors contributing to the economic advantages of central plants are described.

The cost comparison performed for a 30 year future time period for the Southeast Federal Area of Washington, D. C., indicates that by year 2000 it will cost 15 to 20 percent less annually to own and operate a properly selected and phased central plant system than the optimum cost local plant systems.

Key Words: Central heating and cooling plants, cost analysis, cost comparison, economics, future trend, local building heating/cooling plants, Southeast Federal Area, Washington, D.C.

Introduction

The last twenty years has seen a revolutionary growth in the use of year round air conditioning in both living and working spaces in the United States and many other developed countries. Today, air conditioning has received such financial and social acceptance, that essentially all United States hotels, office buildings, stores, hospitals, libraries, museums, government buildings and privately built apartment buildings are centrally air conditioned.

In the last twenty-five year period, the requirement for year round human comfort heat and cooling has resulted in many billions of dollars of equipment and construction costs (1).[2] In many areas it has proven to be more economical and reliable to employ, either individually or in combination, centralized district heating, domestic hot water and chilled water production.

Basic Advantage

There is one inherent and basic economic advantage in the distribution of steam (or hot water) and chilled water from a single central district heating/cooling plant, over and above that practically attainable in heating and cooling supplied from individual building plants. This basic advantage is that the unit cost of producing heat (1 million Btu) and/or cooling (tons/hr) decreases as the size of the district plant increases, up to a size representing the heat/cooling-consuming capacity of a very large number of buildings. The decrease in unit cost more than offsets the cost of distributing heat and/or cooling, until a maximum economic distance from the district plant is reached.

A graphical description of this advantage for a theoretical district heating/cooling system is illustrated in figure 1. The knee of the curve (i.e., the point where total cost starts to increase)

[1] Vice President, Chief Engineer.

[2] Figures in parentheses indicate the literature references at the end of this paper.

occurs where the number of buildings connected become so large that separation distances become disproportionately great. This illustration does not presume to suggest that it is impossible to burn fuel economically in individual local plants. It represents, however, the facts as found in general practice, wherein the amount of supervisory and engineering attention given to a small local plant operation does not ordinarily result in as high over-all operating economy, as is found in the larger district system plants.

Contributing Factors

Some of the factors that contribute to the economic advantage of district heating and/or cooling systems over individual local building plants are:

- Reduction in consumption of fuel for the production of heating and/or cooling energy on account of increased plant efficiency and a more skilled operation of the large boiler/chiller plants.

- Potential of burning low cost coal as basic fuel, thereby reducing requirements for oil import.

- Potential of burning low cost, low quality, high sulfur content coals in pollution free, compact, low cost, high efficiency fluidized-bed boilers (3).

- Reduction of total capital investment and consumption of steel for the boiler and chiller facilities due to increased unit capacity, use of improved boiler/chiller designs and reduction of required standby reserves.

- Reduction of the number of operating personnel required for the heating/cooling plant operation.

- Reduction of fuel transportation, handling and ash handling and disposal expenses.

- Reduction of cost of heating and cooling systems as a whole due to the possibility of organizing the heat and cooling consumption conditions in a better way.

- Elimination of smoke and dirt thereby decreasing building cleaning, painting, decorating costs.

- Reduction of repair, insurance and inspection expenses.

- Availability of valuable space which can be rented or used, which otherwise would be occupied by local boiler and chiller plant, fuel storage and stack.

- Lower cost of fuel and other supplies due to the quantity purchased and more competitive buying.

- Reduced unit capacity cost and economical pollution control system operation.

- Possibility to combine the generation of district heating and/or cooling with electric power generation in combined central plants at high efficiency, as illustrated in figures 2 and 3.

  The physical layout of some localities permits a combined heating/cooling and electric generating plant. With such an arrangement, both heating/cooling and electric properties gain advantages that do not exist where each operates independently.

Cost Analysis

Various systems were studied and compared in a Government sponsored Year 2000 Study (5) in order to evaluate economic advantages of central heating and cooling systems, based on owning and operating costs, using a thirty year time period, (years 1975 and 2005).

The analysis of costs developed for building heating and cooling systems was based on calculated requirements of future Federal Buildings, about 11 million square feet net building area, as shown in figure 4, in the Southeast Area of Washington, D. C., and on a comparative analysis of the basic alternate plants developed, and their feasible variations.

For comparative purposes, the following expenses were included:

Steam Supply from Local Boilers:

- Local boiler plant with gas fuel
- Steam building heating systems
- Electrical services
- Water and other services
- Space requirements

Steam Supply from Central Plant:

- Steam plant, complete, (oil fuel)
- Steam distribution and return systems
- Pressure control stations
- Steam building heating systems
- Electrical services
- Water and other services
- Space requirements

HTW Supply from Central Plant:

- HTW plant, complete, (oil fuel)
- HTW distribution system complete
- HTW steam convertors
- Building heating systems
- Electrical services
- Water and other services
- Space requirements

Local Electric Building Heating:

- Electric heaters
- Incremental cost of electrical services

Local Chilled Water Cooling:

- Cooling Equipment
- Cooling towers
- Controls
- Local plant and condenser piping
- Incremental boiler capacity for steam operated units when steam is from local boilers
- Electrical services
- Space requirements

Local Total Energy Systems:

- Local boiler plant with gas fuel
- Steam building heating systems
- Electrical services
- Space requirements
- Water and other services
- Cooling equipment
- Cooling towers
- Controls
- Local plant and condenser piping

Local Heat Pump Systems:

- Heat pumps
- Supplementary electric heaters
- Incremental cost of electrical services
- Space requirements
- Piping, controls

Chilled Water from Central Plants:

- Chiller plant, complete
- Chilled water distribution complete
- Local heat exchangers

All costs (capital recovery and annual operating) were calculated at 7% compound interest rate over the estimated life of the equipment, or system. Value of land for local or central plants and distribution systems was not included.

Cost Comparison

Comparison of costs prepared for the analyzed area and systems is presented in figure 5 for central and local heating and cooling systems annual owning and operating costs.

An analysis of these cost curves indicates that when building heating and cooling is supplied to the Southeast Federal Area buildings from a central district heating and cooling plant, via distribution systems to the local buildings, an optimum annual cost savings of over 15% could be materialized, over the cost of individual local building systems, before year 2000.

Conclusion

There are many economic advantages in district heating and cooling. Building owners, managers, city planners, Federal, State and local governmental units, as well as private industry are becoming more and more aware of this fact as evidenced by its increasing use.

This trend will continue as long as the benefits are maintained and the advantages are proven. Central heating is already common practice in many parts of the world: 30% of the installed electricity generating capacity in the U.S.S.R. is associated with district heating. In Sweden, Denmark and Finland, as well as in many central European countries, it is also employed quite extensively, but there is still scope for much wider use. England is only beginning to realize the benefits of expanding the practice of central heating from district heating systems and is in the process of amending legislation to enable greater freedom of installation.

However, the supply of heat through central distribution systems, in the form of steam or hot water, could only be economical in urban or industrial areas where concentration of loads in load centers limits the unit cost ($/Btu/year distributed) of distribution systems. A recent European survey has shown that 55% of the population could be supplied from central district heating plants and this figure will most likely increase in the next few decades, since the world's urban population is growing much faster than the total population.

In areas where heat consumption and heating density are low, the district heating and/or centralization of heat supply from district plants are inefficient, especially if it is possible to use natural gas as fuel in individual local building systems. Diverse local conditions, density of the thermal loads, power resources available and other factors make it necessary to find the best suitable and most efficient method of heat (or cooling) supply for every particular area. Technical and economical evaluations must be performed to determine the optimum combination of central (district) systems with other systems of centralized and/or decentralized and/or local plants.

The future looks promising and it appears that planning (6), construction and operation of central heating and cooling plants and distribution systems has entered a period of healthy expansion.

References

(1) Mesko, J. E. and Kaplan, S., Energy-systems Planning by Computer. Power, June 1968 (McGraw-Hill).

(2) Reprinted from The District Heating Handbook, Third Edition (1951), with the permission of the International District Heating Association, Pittsburgh, Pa.

(3) Mesko, J. E. and Ehrlich, S., Fluidized Bed Holds Promise for Coal. Electric Light and Power, April 1973 (E/G Edition).

(4) Harboe, Henrik, Importance of Coal for Heat and Power Generation. STAL-LAVAL (Great Britain) Ltd., 1973.

(5) Pope, Evans and Robbins Incorporated, Year 2000 Study of Central Heating and Cooling Plants and Distribution Systems. GSA Contract GS-00-B-487 (PCDD).

(6) Mesko, J. E., District Heating and Cooling Systems Planning by Computer. 1st International District Heating Conference, England 1970.

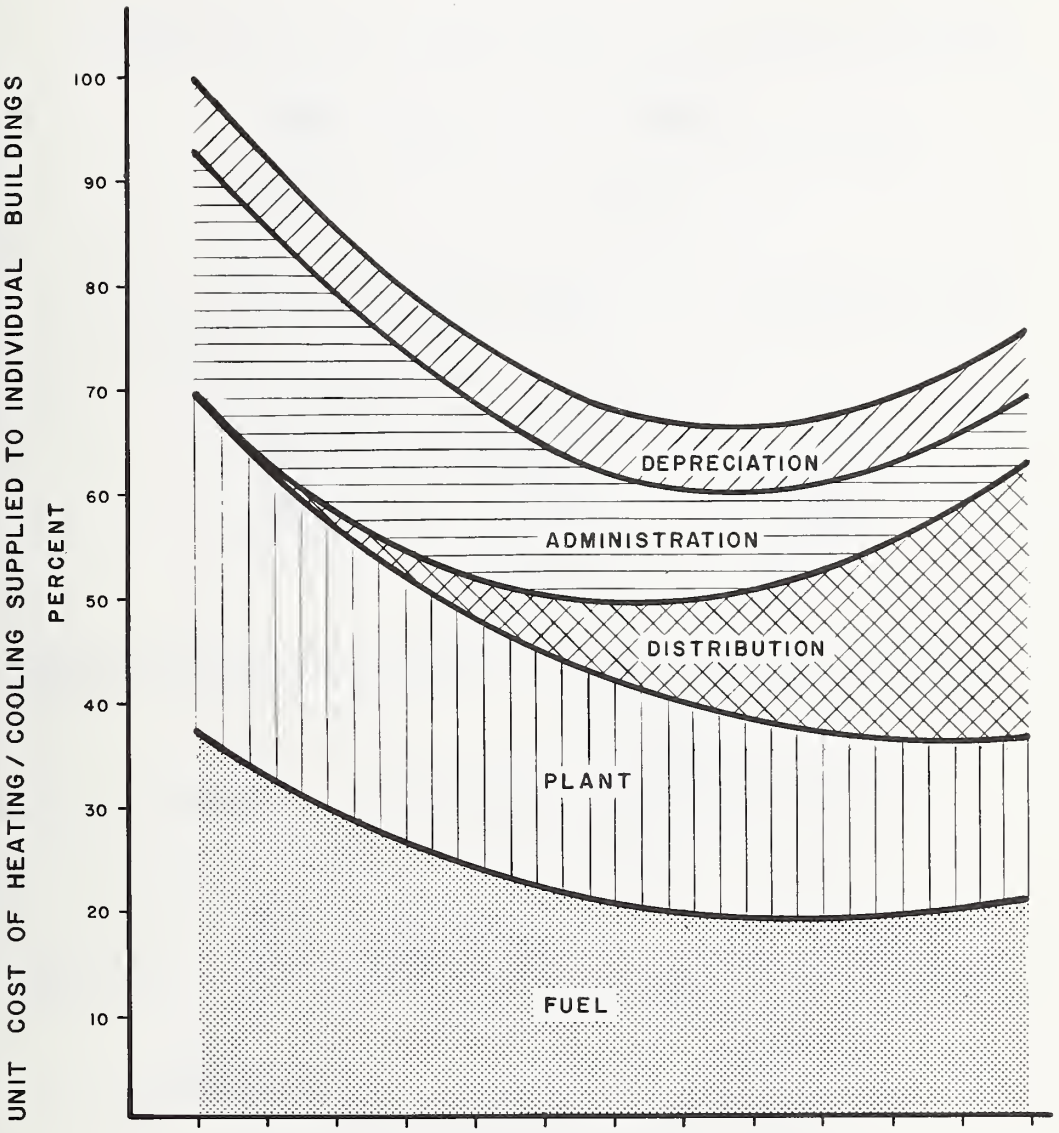

UNIT COST OF DISTRICT HEATING / COOLING SUPPLIED FROM A SINGLE PLANT (2)

Figure 1 - Unit Cost of District Heating/Cooling Supplied from a Single Plant

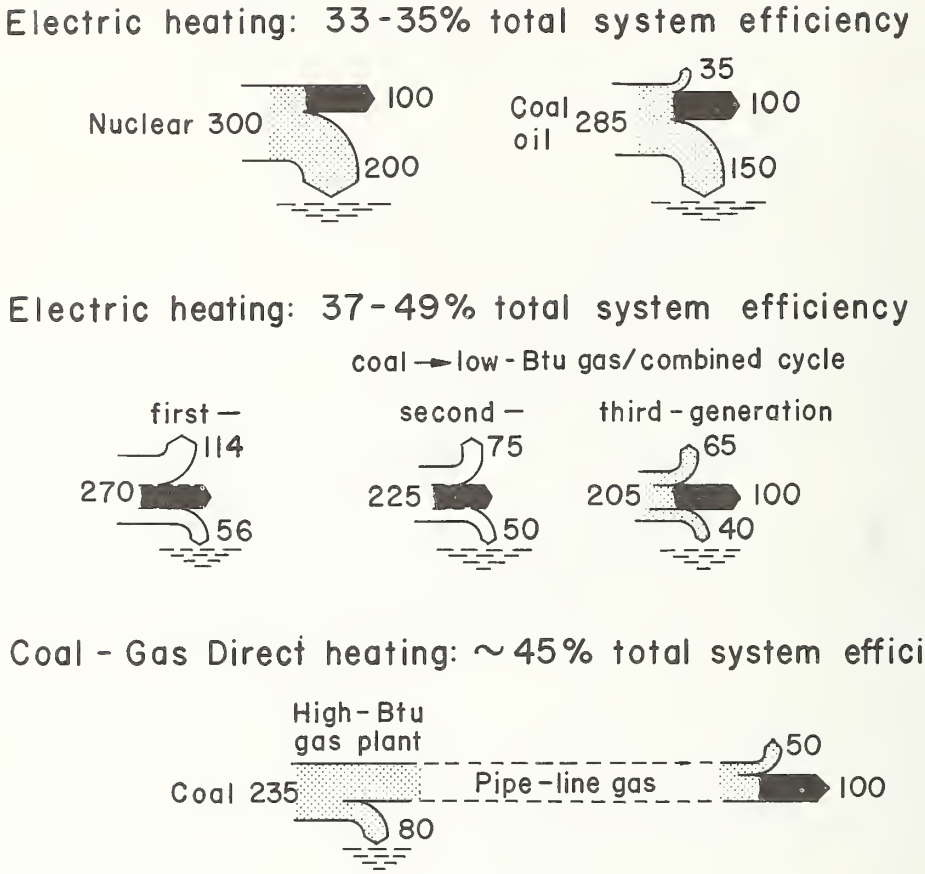

Figure 2 - System Efficiencies for Combined Generation of Electric Power and Heating

POWER PLANT

complete with back pressure turbines
evaluated on electric output $ 230/kW

HOT WATER PIPES

complete double piping distribution
system from power plant to consumers –
evaluated on heat capacity $ 60/kW

RATIO

electric output to heat output 35:65

TOTAL CAPITAL COST

evaluated on total
useful output

0.35 x 230 = 81
0.65 x 60 = 39
TOTAL $ 120/kW

EFFICIENCY:

at power station: 85-89%
after distribution losses: > 80%
ANY FUEL !!!

DISTRICT HEATING COST [4]

Figure 3 - District Heating Cost

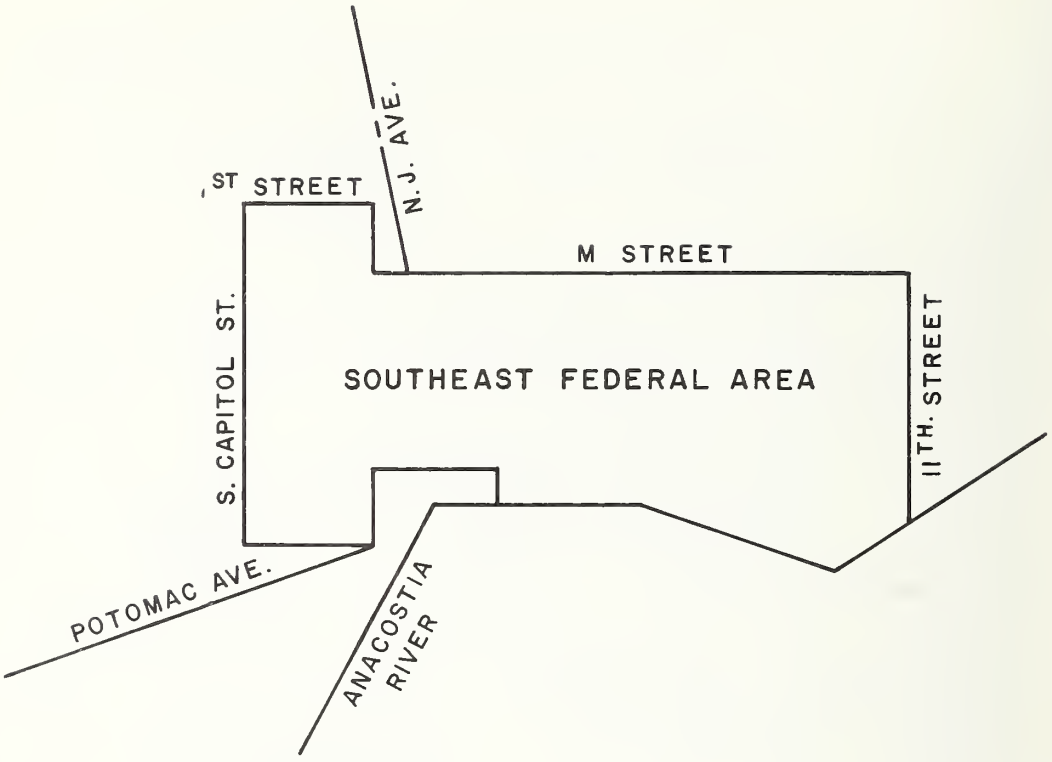

NET BUILDING AREA 10^6 SQ. FT.

PERIOD	AREA	TOTAL
1975 - 1980	1.50	1.50
1980 - 1985	2.00	3.50
1985 - 1990	2.50	6.00
1990 - 1995	1.50	7.50
1995 - 2000	1.50	9.00
2000 - 2005	2.00	11.00

AREA ANALYZED

Figure 4 - Area Analyzed

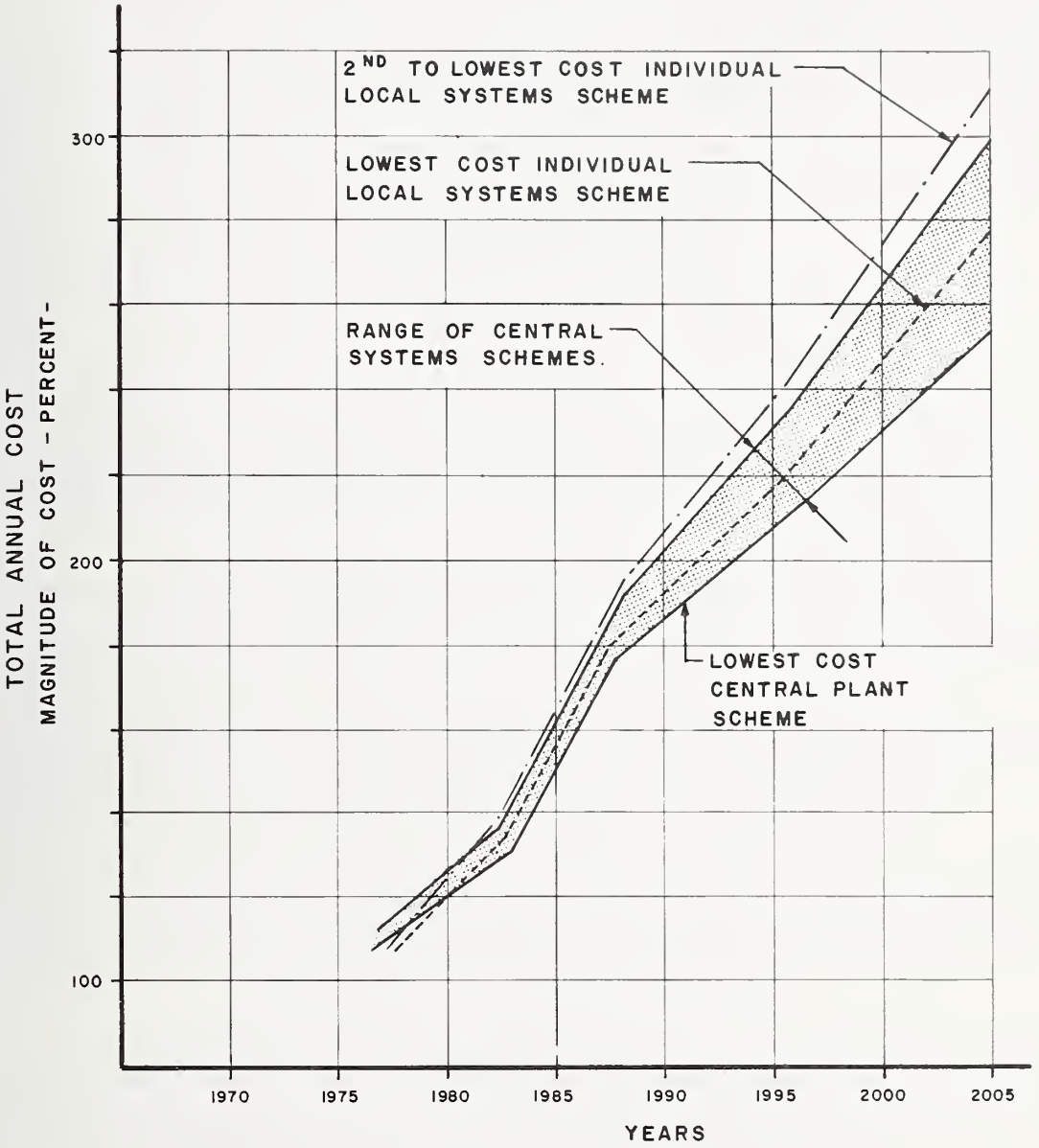

HEATING / COOLING SYSTEMS ANNUAL OWNING & OPERATING COSTS

- SOUTHEAST FEDERAL AREA -

WASHINGTON D.C. (4)

Figure 5 - Heating/Cooling Systems Annual Owning & Operating Costs (Southeast Federal Area, Washington, D. C.)

Heat Transfer Studies of Underground Chilled Water and Heat Distribution Systems

T. Kusuda
Thermal Engineering Systems Section
Center for Building Technology
National Bureau of Standards
Washington, D. C. 20234

ABSTRACT

Heat transfer theory of underground pipe systems which include systems of more than one pipe at different temperatures buried in the same trench is summarized in this paper. Experimental observation made on a two-pipe chilled water system connecting the Pentagon and another Federal Office Building (FOB2) in Washington, D. C., was used to verify the theoretical analysis. In addition, the paper presents a concept of using integrated 10 ft average temperatures I10ET of selected earth temperature stations in the United States for design calculations.

The I10ET's could be used for selecting the pipe insulation in lieu of the ground water temperatures on certain average temperatures, which are currently being used.

Keywords: Chilled water pipe; earth temperature; heat transfer; multiple pipe system; underground pipe.

1. Introduction

Underground heat distribution systems for a complex of buildings have been widely used in the United States for the past several decades. Generally, a heat transfer analysis for underground pipes is considered less important than other technical problems such as the possibility of failure of the piping system due to corrosion, thermal expansion, or moisture penetration through the thermal insulation. This is largely because many of the underground installations are designed to distribute steam or hot water and the heat loss from these pipes is usually small as compared with the total heat energy being transmitted through the pipe provided that the thermal insulation is not damaged and rendered ineffective by leaking pipe fluid or from ground moisture. This is the reason that main emphasis has been placed on the preservation of dry insulation around the pipe, corrosion protection of the conduit which houses the piping system, and the design of the piping system to minimize stress caused by the thermal expansion and contraction.

Only recently underground chilled water distribution systems began to gain popular acceptance. The economic consideration as to whether the chilled water pipes should be insulated or not has required a careful reevaluation of the heat transfer problem[1/].

Some underground chilled water pipes are currently installed uninsulated allowing a considerable savings in capital investment especially for a large district cooling system. The uninsulated chilled water system appears justified on the following basis:

a. Ground temperature is not severely affected by the presence of a deeply buried uninsulated chilled water pipe and soil ecology and plant life are not unduly affected.

b. Heat gain from the surrounding earth to large size chilled water pipes is usually a very small part of the total refrigeration load and increases in the temperature of the chilled water being circulated in the underground piping network are not significant.

c. There are usually no heated pipes or other heat sources which would raise the soil temperatures in the vicinity of the chilled water pipe system.

The main question, therefore, is under exactly what conditions is it necessary to insulate underground chilled water pipes? If insulation becomes necessary how much is needed? These questions are the concern of this paper.

This paper presents the results of a two-phase study conducted recently at NBS. The first phase deals with mathematical analyses of underground pipe heat transfer with special emphasis on the periodic nature of the ground surface temperature and the cooling effects associated with the multiple pipe systems. This study was done using a computer simulation of underground pipe systems by solving the basic governing differential equations.

The second phase of the study deals with the validation of the mathematical model developed in the first phase by conducting field measurements on an actual chilled water pipe installation.

The validated methodology for estimating heat transfer of multiple pipe systems is currently adopted by the Federal Construction Council for the use in their guidelines for specifying pipe insulation.

2. Theoretical Analysis of Underground Pipe Heat Transfer

Except for the work of Loudon[2/], the few papers published in the past which take into account the realistic conditions applicable to the analysis of underground pipe heat transfer to and from underground pipes are either steady-state solutions for a pipe at shallow depths or several transient heat conduction solutions for a single deep underground pipe. All of these solutions are based upon the assumption that the earth surrounding the pipe is homogeneous, that the thermal properties of the earth are constant and that the temperature of the earth at reasonable distances from the pipe is constant and unaffected by the existence of the pipe.

These assumptions are unrealistic because earth thermal properties as well as earth temperatures change with respect to time and space. The change is a result of the seasonal change of the earth surface temperature and movement of the soil moisture or ground water around the pipe.

Analytical solutions which take into account these realistic situations are extremely difficult to obtain and are not expected to be available in the near future. Therefore, the approach here was

[1] Figures refer to literature references at the end of this paper.

to examine steady heat transfer theories in the light of transient (inclusive of periodic) boundary conditions to provide approximate but reasonable solutions for many practical problems.

2.1 Single Shallow Pipe System (Figure 1)

The solution for steady-state heat conduction from an underground pipe installed horizontally at a finite depth in homogeneous soil can be found in several heat transfer texts[3,4]. This solution is based upon potential flow theory and is obtained by the use of the "mirror-image" technique[3]. According to this technique, the heat loss Q from the unit length of the pipe of temperature T_p to the undisturbed ground at an average temperature T_G can be expressed in consistent units as follows

$$Q = \frac{2\pi \cdot K_s \cdot (T_p - T_G)}{\ln\left\{\frac{d}{r} + \sqrt{\left(\frac{d}{r}\right)^2 - 1}\right\}} \qquad (1)$$

where k_s = thermal conductivity of earth surrounding the pipe
d = depth of the pipe measured from the ground surface to the centerline of the pipe
r = external radius of the pipe where the pipe temperature is T_p
$\ln$ = natural logarithm

Another form of the above equation, usually cited is

$$Q = \frac{2\pi \cdot K_s \cdot (T_p - T_G)}{\ln\left(\frac{2d}{r}\right)} \qquad (2)$$

which is an approximate representation of equation (1) when $d/r \gg 1$, or when the radius of the pipe is sufficiently smaller than the depth.

When the pipe is insulated, a term for the thermal resistance of the insulation layer must be added to the above equations. If the pipe is uninsulated and the pipe material has a high thermal resistance, such as non-metallic pipes, the thermal resistance term for the pipe wall should also be included in the pipe heat transfer equation as follows:

$$Q = K_p \cdot (T_F - T_G) \qquad (3)$$

$$\frac{1}{K_p} = \frac{1}{2\pi K_s}\left\{\frac{K_s}{r_w h_w} + \frac{K_s}{K_w}\ln\left(\frac{r-t}{r_w}\right) + \frac{K_s}{K_I}\ln\left(\frac{r}{r-t}\right) + \ln\left(\frac{d}{r} + \sqrt{\left(\frac{d}{r}\right)^2 - 1}\right)\right\}$$

K_p = pipe heat transfer factor

T_F = pipe fluid temperature

T_G = undisturbed average earth temperature surrounding the pipe

r_w = inside radius of the insulation

t = thickness of the pipe insulation

h_w = heat transfer coefficient of the pipe fluid

k_s = thermal conductivity of the earth surrounding the pipe

k_w = thermal conductivity of the pipe wall

k_I = thermal conductivity of the pipe insulation

In the above expression for the pipe heat transfer factor, K_p, it is customary for the case of metallic pipes to ignore the terms involving h_w and k_w because of their very low numerical value. Even for the nonmetallic pipes, the term involving h_w is usually neglected unless the pipe fluid velocity is extremely small.

2.2 Multiple Pipe System: (Figure 2)

In practice, several pipes may be installed in close proximity to one another. This is particularly so for the case of district heating and cooling plants where chilled water line, steam mains, condensate returns and other utility lines may be buried side by side in the same trench.

Under this situation, heat transfer around each pipe is affected by the presence of adjacent pipes. Steady-state heat transfer for a multiple pipe system has been analyzed here in detail because little information was found available from reference material. The multiple pipe system considered in this section is shown schematically in figure 2. The undisturbed earth temperature is designated by T_G whereas the earth temperature at any point (x, -Y) in the region of pipe heat transfer is designated by T.

The difference in temperature $T - T_G$ due to M number of heat sources (or sinks), can be obtained by the mirror image technique employed for the single pipe problem in consistent units as follows:

$$T - T_G = \sum_{i=1}^{M} \frac{Q_i}{4\pi K_s} \ln \left\{ \frac{(X-a_i)^2 + (Y-d_i)^2}{(X-a_i)^2 + (Y+d_i)^2} \right\} \qquad (4)$$

where Q_i = strength of the i-th heat source (if plus) or sink (if minus).
It is the total heat loss (if plus) or heat gain (if minus) of the i-th pipe per unit length.
k_s = thermal conductivity of earth surrounding all the pipes
a_i and d_i = coordinates of the center of the i-th pipe referring to an arbitrary origin of the coordinate system (X, -Y). If, for instance, the coordinates were so chosen that $X_1 = o$ and $Y_1 = -d_1$, the origin of the coordinates for the multiple pipe system would be at the ground surface above the centerline of the first pipe.

By denoting the exterior radius of the k-th pipe by r_k, the heat transfer surface of that pipe can be expressed as

$$(X-a_k)^2 + (Y+d_k)^2 = r_k^2 \qquad (5)$$

Or with the use of the polar coordinate system

$$X = a_k + r_k \sin\theta$$
$$Y = r_k \cos\theta - d_k \qquad (6)$$

where θ is the angular position of a point on the heat transfer surface around the k-th pipe as shown in figure 2. By substituting (6) into (4), the surface temperature for the k-th pipe can be obtained as a function of θ as follows:

$$T_k(\theta) - T_G = \sum_{i=1}^{M} \frac{Q_i}{4\pi K_s} \ln \left\{ \frac{(a_k - a_i + r_k \sin\theta)^2 + (r_k \cos\theta - d_k - d_i)^2}{(a_k - a_i + r_k \sin\theta)^2 + (r_k \cos\theta - d_k + d_i)^2} \right\} \qquad (7)$$

By denoting further that

$$A_{ki}^2 = \frac{(a_k - a_i)^2 + (d_k - d_i)^2}{r_k^2}$$
$$A_{ki}'^2 = \frac{(a_k - a_i)^2 + (d_k + d_i)^2}{r_k^2} \qquad (8)$$
$$\tan\varphi_{ik} = \frac{a_k - a_i}{d_k - d_i}$$
$$\tan\varphi_{ik}' = \frac{a_k - a_i}{d_k + d_i}$$

equation (7) becomes

$$T_k(\theta) - T_G = \sum_{\substack{i=1 \\ i \neq k}}^{M} \frac{Q_i}{4\pi K_s} \ln \left\{ \frac{A_{ik}'^2 - 2A_{ik}' \cos(\theta + \varphi_{ik}') + 1}{A_{ik}^2 - 2A_{ik} \cos(\theta + \varphi_{ik}) + 1} \right\}$$
$$+ \frac{Q_k}{4\pi K_s} \ln \left\{ 1 - \frac{4 d_k \cos\theta}{r_k} + \left(\frac{2 d_k}{r_k} \right)^2 \right\} \qquad (9)$$

The average surface temperature of the k-th pipe is, therefore, obtained by integrating equation (9) with respect to θ as follows:

$$T_k - T_G = \frac{1}{2\pi} \int_0^{2\pi} \{ T_k(\theta) - T_G \} \, d\theta$$

$$= \frac{1}{4\pi K_s} \sum_{\substack{i=1 \\ i \neq k}}^{M} Q_i \ln \left(\frac{A'_{ik}}{A_{ik}} \right)^2$$

$$+ \frac{Q_k}{4\pi K_s} \ln \left(\frac{2 d_k}{r_k} \right)^2 \qquad (10)$$

This equation is consistent with the approximate solution for the case of the single pipe heat transfer equation (2) if M = 1.

By defining matrix elements $P_{i,k}$ in such a manner that

$$P_{ik} = \ln \left(\frac{A'_{ik}}{A_{ik}} \right)^2 \qquad (11)$$

$$P_{kk} = \ln \left(\frac{2 d_k}{r_k} \right)^2$$

the values of $Q_1, Q_2 \ldots Q_m$ can now be obtained as a solution of the following simultaneous equations.

$$\frac{1}{4\pi K_s} \begin{vmatrix} P_{11} & P_{12} & \cdots & P_{1M} \\ P_{21} & P_{22} & \cdots & P_{2M} \\ \vdots & & & \\ P_{M1} & P_{M2} & \cdots & P_{MM} \end{vmatrix} \cdot \begin{vmatrix} Q_1 \\ Q_2 \\ \vdots \\ Q_M \end{vmatrix} = \begin{vmatrix} T_1 - T_G \\ T_2 - T_G \\ \vdots \\ T_M - T_G \end{vmatrix} \qquad (12)$$

provided that the values of T_1, T_2 ... T_M are known.

The above equations are for bare steel pipe systems where the average exterior pipe temperature can be safely approximated to be equal to the pipe fluid temperature.

When the system includes non-metallic pipes or insulated pipes, the external surface temperatures (pipe-earth interface temperatures) T_1, T_2 ... T_M must be calculated first. Assuming, for the time being, that the values of T_1, T_2 ... T_M are known as well as the pipe fluid temperatures, T_{F1}, T_{F2} ... T_{FM}, the heat transfer from the pipes Q_1, Q_2 ... QM are then calculated by

$$Q_k = C_k (T_{Fk} - T_k) \tag{13}$$

where C_K = is the heat transfer coefficient for the k-th pipe corresponding to the thermal resistance between the pipe fluid and the external radius of the pipe or pipe and insulation where it interfaces with soil. The value of C_k can be calculated by

$$\frac{1}{C_k} = \frac{1}{2\pi} \left\{ \frac{1}{K_{Ik}} \ln\left(\frac{r_k}{r_{Ik}}\right) + \frac{1}{k_{mk}} \ln\left(\frac{r_{Ik}}{r_{mk}}\right) + \frac{1}{r_{mk} h_w} \right\} \tag{14}$$

in equation (14), $k_{I,k}$ and $k_{m,k}$ are the thermal conductivities of insulation and wall for the k-th pipe whereas $r_{I,k}$ and $r_{m,k}$ are the external radii of the insulation and the wall, respectively.

The symbol h_w refers to the heat transfer coefficient between the pipe fluid and the pipe wall. The value of h_w is usually very high unless the pipe fluid velocity is extremely small and consequently the last term of equation (14) is usually neglected.

By substituting equation (13) into (12) and rearranging the terms with respect to the pipe average surface temperature T_1, T_2 ... T_M, the following simultaneous equations result:

$$\begin{vmatrix} P_{11}' & P_{12}' & \cdots & P_{1M}' \\ P_{21}' & P_{22}' & \cdots & P_{2M}' \\ \vdots & & & \\ P_{M1} & P_{M2} & \cdots & P_{MM}' \end{vmatrix} \cdot \begin{vmatrix} T_1 \\ T_2 \\ \vdots \\ T_M \end{vmatrix} = \begin{vmatrix} B_1 \\ B_2 \\ \vdots \\ B_M \end{vmatrix} \tag{15}$$

where

$$P_{ik}' = \frac{C_k P_{ik}}{4\pi K_s}$$

$$P_{kk}' = 1 + \frac{C_k P_{kk}}{4\pi K_s}$$

$$B_i = T_G + \frac{1}{4\pi K_s} \sum_{k=1}^{M} C_k P_{ik} T_{Fk}$$

The solution of (15) yields a set of pipe-soil interface temperatures T_1, T_2 ... T_M, thus permitting the calculation of pipe heat transfer by equation (13).

When equation (15) is to be solved for the multiple pipe system where some of the pipes are non-insulated steel pipes, fictitious insulation of arbitrary thickness with the thermal conductivity identical to the surrounding soil may be assumed for the bare pipes. This procedure is necessary because the values of $P_{i,k}$ and B_i are meaningless otherwise.

Computer programs have been developed during the course of this study to carry out the calculations for the multiple pipe system.

A sample application of this analysis is illustrated in figures 3 . This is included here to show the relative effect on heat transfer of distance between pipes. The values in parenthesis indicate percentage change from the case where each pipe is considered to be a single separate pipe system.

2.3 Pipes in an Underground Conduit (Figure 4)

When a group of pipes (some insulated and others non-insulated) are installed in an unvented underground conduit such as illustrated in figure 4, the following heat balance equation in consistent units describes the overall heat transfer process

$$\sum_{k=1}^{M} 2\pi r_k U_k (T_{fk} - T_a) = K (T_a - T_G) \qquad (16)$$

where M = total number of pipes in the conduit
r_k = outside radius of insulated or non-insulated pipes (k-th pipe)
U_k = overall heat transfer coefficient of the k-th pipe calculated by the following formula

$$\frac{1}{U_k} = \frac{r_k}{k_{I,k}} \ln\left(\frac{r_k}{r_k - t_k}\right) + \frac{1}{h_a} \qquad (17)$$

$k_{I,k}$ = thermal conductivity of the insulation around the k-th pipe
t_k = thickness of the insulation around the k-th pipe
h_a^k = outside surface heat transfer coefficient around the pipe (if no data are available, it may be approximated by 3.0 Btu/hr, ft^2, F)*/
T_{fk} = temperature of the k-th pipe
T_a^a = air temperature in the conduit
T_G^a = undisturbed ground temperature surrounding the conduit
K^a = overall heat transfer factor of the conduit calculated by

$$\frac{1}{K} = \frac{1}{2\pi K_s}\left\{\frac{K_s}{(R-t)h_a} + \frac{K_s}{K_w}\ln\left(\frac{R}{R-t}\right) + \ln\left\{\frac{d}{R} + \sqrt{\left(\frac{d}{R}\right)^2 - 1}\right\}\right\} \qquad (18)$$

*/ Based upon recent unpublished experimental data at the National Bureau of Standards.

where

k_s = thermal conductivity of earth surrounding the conduit

R = outside radius of the conduit */

k_w = effective thermal conductivity of the conduit wall

t = thickness of the conduit wall

d = depth of the conduit, distance between the ground surface and the center-line of the conduit

In equation (17) and (18), the thermal resistances across the walls of the metallic pipe and metallic conduit were neglected from the analysis. If the metallic pipe or conduit is uninsulated, terms such as

$$\frac{r_k}{K_{Ik}} \ln\left(\frac{r_k}{r_k - t_k}\right) \quad \text{or} \quad \frac{K_s}{K_w} \ln\left(\frac{R}{R-t}\right)$$

can be dropped. For the uninsulated non-metallic pipes or conduit, the wall thickness, and their thermal conductivity values should be retained for t_k and t and k_{Ik} and k_w, respectively.

Solving for T_a from equation (16) and rearranging, the heat transfer from k-th pipe in the conduit can be obtained as follows

$$Q_k = 2\pi r_k U_k (T_{fk} - T_a) \tag{19}$$

where

$$T_a = \frac{K T_G + \sum^{M} 2\pi r_k U_k T_{fk}}{K + \sum 2\pi r_k U_k} \tag{20}$$

If the conduit is ventilated and the ventilation mass flow rate is known to be G,lb/hr, equation (20) may be modified to yield

$$T_a = \frac{\sum^{M} 2\pi r_k U_k T_{fk} + \frac{GC_p}{L} T_v + K T_G}{\sum^{M} 2\pi r_k U_k + \frac{GC_p}{L} + K} \tag{21}$$

where C_p = specific heat of air

T_v = the ventilation air temperature

L = total vented length of the conduit

Data on ventilation rates for underground conduits is extremely scarce. Possible natural ventilation (without the wind effects) for a vented underground conduit system can be estimated as follows: The theoretical natural draft for an underground conduit of d ft depth is calculated by [5]

$$\Delta P = 0.52 \cdot P_B \cdot d \cdot \left(\frac{1}{T_o} - \frac{1}{T_a}\right) \tag{22}$$

where Δp: draft in inches of water

P_B = atmospheric pressure in psi

d = depth of the conduit, in ft

T_o = absolute temperature of outdoor air, Rankine

T_a = absolute temperature of conduit air, Rankine

---

*/ If the conduit is square in cross section instead of circular, equivalent radius may be approximated by R = 0.56 W, where W is the external width of the square conduit [7].

In addition, the pressure drop of ventilation air flowing within an underground conduit can be calculated by

$$\Delta P = \left(C_i + C_o + \frac{fL}{D}\right) \cdot \left(\frac{V}{4005}\right)^2 \left(\frac{\rho}{0.075}\right) \qquad (23)$$

where C_i = entrance pressure loss coefficient

C_o = exit pressure loss coefficient

f = frictional pressure loss coefficient

L = length of the pipe between two consecutive vents along the pipe, ft.

D = hydraulic diameter of the air passage within the conduit, ft.

V = velocity of the air flow, ft/min.

ρ = density of the air within the conduit, lb/ft^3

By noting that the net ventilation flow G (lb/hr) can be expressed by

$$G = 60 \rho V A_c \qquad (24)$$

where A_c represents the cross sectional area for air passage within the conduit, and by combining equations (22), (23), and (24), it is possible to write

$$G = 240300 \rho A_c \sqrt{\frac{0.52 P_B \cdot d \cdot \left(\frac{1}{T_o} - \frac{1}{T_a}\right)}{\left(C_i + C_o + \frac{fL}{D}\right)\left(\frac{\rho}{0.075}\right)}} \qquad (25)$$

For evaluation of G it is necessary to have data on C_i, C_o, and f. Moreover, equation (21) requires calculation of the value of T_a, conduit air temperature. Thus, the process of estimating the air temperature in a vented conduit requires iterative procedures which are cumbersome for manual calculation.

2.4 Underground Pipe in an Insulated Trench (Figures 5 and 6)

In some installations, pipes are installed in a trench and an insulating material is poured over and around the pipes as illustrated in figures 5 and 6. For the case of a single pipe system (figure 5), a square region insulated in the trench can be treated as an equivalent angular ring of exterior radius 0.56 W, where W denotes the exterior width of the insulated region.[2/]. The analysis presented in Section 2.1 can then be used to approximate the pipe heat transfer. For the case shown in Figure 6, or the multiple pipe system, the computational method developed in Section 2.2 can be used if the insulated region is assumed to consist of two equivalent annular zones such as shown by the dotted circles in igure 5. This assumption can be expected to yield erroneous results if the distance between the pipes is very small as compared with the total dimensions of the insulated zone. The precision can be improved, however, in the following manner: Repeat the above calculation on the premise that uninsulated pipes are buried in soil whose thermal properties are equal to those of the insulating material. The actual pipe heat transfer value should then lie between the sets of values thus calculated.

3. Earth Temperature Data

When evaluating underground pipe heat transfer by the analyses indicated in the foregoing sections, it is essential that the temperature of the earth surrounding the pipe be known.

It has been customary, when designing a pipe heating system, to assume that the earth temperature is equal to the well water temperature for any given region because the well water temperature is close to the annual average earth temperature. This concept appears reasonable as long as the annual average heat transfer from the heat distribution system is all that is to be estimated. Moreover, well water

temperature data, such as that compiled by Collins[6], are readily available for many localities in the United States. If, however, the maximum heat loss or heat gain of the underground pipes are desired, the well water temperature is not adequate[7]. This is due to the fact that underground pipes are installed at the depth less than 10 ft from the surface where the seasonal change of the ambient air temperature affects the heat transfer process.

Penrod's data[8] shows, for instance, that at a depth of 10 ft the temperature of the earth at Lexington, Kentucky is at its minimum in April, approximately 50 F, and, is at its maximum in October, approximately 65 F. Thus, it is considered to be impractical to evaluate the maximum heat gain to a chilled water pipe which is at 45 F and buried at the depth of 5' on the basis of the well water temperature, or on the annual average air temperature, which in this particular example is 58 °F.

In contrast, errors may not be critical at all for the design of steam mains whose temperatures are well above 300 ° F.

According to reference 7, the annual earth temperature cycle, T, of a given thermal diffusivity, may be approximated by a simple harmonic function such as

$$T = A - Be^{-\sqrt{\frac{\pi}{\alpha p}}y}\cos\left(\frac{2\pi t}{p} - \phi - \sqrt{\frac{\pi}{\alpha p}}y\right) \qquad (26)$$

where y = depth

p = period of the annual cycle, 365 days

t = time in days

A = annual average earth temperature N well water temperature

B = amplitude of the earth surface temperature cycle

ϕ = phase angles of the earth temperature cycle relative to a datum point

α = thermal diffusivity, ft^2/hr

Reference 7 lists the values of A, B and Ø for various earth temperature stations in the United States. The thermal diffusivity appearing in equation (26) is dependent upon the type of soil and its moisture content as shown, for example, in figure 7.

The average earth temperature, T_G, as used in previous discussions can be evaluated by taking the integrated average of equation 26 at the depth of interest. Since the center-line depth for most underground pipes is approximately 10 ft., the integrated average temperature for $0<y<10$ ft. (I10ET) were obtained for many places in the United States where the earth temperature records were maintained. The results of this integration calculation will be presented in a forthcoming NBS publication and individually for Winter (January 1), Spring (April 1), Summer (July 1) and Fall (October 1), representing the seasonal average values. Reference 7 shows that the majority of the thermal diffusivity values deduced from the measured earth temperatures in the United States fall in the neighborhood of 0.025 ft^2/hr. Table 1 is prepared to show I10ET for the selected stations in the United States.

It should be pointed out that results of the recent NBS study show that the I10ET is considerably higher than normal when the soil is under a paved surface. It is recommended that the summer temperature for such a situation be approximately 15°F above the I10ET of undisturbed earth.

4. Experimental Observation of Two Pipe System

An experimental program was undertaken to validate the analytical formula developed in the previous sections. A chilled water supply and return pipe system consisting of two 24-inch ID cement asbestos pipes (wall thickness 4.32 inches) with a separation distance of 12" was chosen for observation. These pipes transfer chilled water 1200 ft away. Heat transfer and temperature data were taken on the pipes for an entire year. Figure (8) shows the pipes during excavation to install the heat flow and temperature tranducers. The underground pipes were covered with approximately 5 ft of earth.

Four surface temperature thermocouples, and four calibrated heat flow meters were installed around each pipe at angular intervals of 90 ^{o}F. In addition, other thermocouples were installed in the soil surrounding the pipes in order to measure the earth temperatures below, above and on both sides of the pipes. Figure 9 is a schematic of the pipe installation and annual profiles of the measured earth temperature. Indicated in the figure by a dark line is the integrated 10 ft average earth temperature (I10ET), the calculation of which was presented in the previous section.

Figure 10 shows annual profiles of measured and observed pipe heat transfer, measured pipe surface temperature, and the pipe surface temperature which were used for calculating the pipe heat transfer. The discrepency between the measured and calculated pipe heat transfer, was due to a sudden change in the pipe surface temperature during the experiment. Generally speaking, however, the agreement between the observed pipe heat transfer and the calculated values are relatively good, considering the fact that the measurment was difficult and the calculations were based on gross assumptions with respect to the soil properties and earth temperatures.

7. Conclusions

The existing engineering methods for evaluating heat transfer to and from underground pipes are summarized and extended as follows:

1. A new concept of earth temperature data called I10ET (an integrated average of 10 ft depth) for underground piping distribution systems was developed and data given for selected stations in the United States and for a selected value of the thermal diffusivity of earth). These data will permit improved accuracy in the appraisal of the maximum heat gain of chilled water systems as well as the maximum heat loss of the hot water or steam pipes.
2. Calculation methods were developed for approximating heat transfer of multiple pipe systems where several pipes of different temperatures, insulations, and sizes are installed in the same vicinity in such a manner that heat transfer of each pipe is affected by its neighboring pipes.
3. Experimental observations were made for a period of one year on a double pipe chilled water system that connects the Pentagon and a federal office building. The observed heat transfer validates the calculation methodology developed for the multiple pipe system.

8. References

(1) Henderson, J. H., "Economic Justification of Thermal Insulation of Underground Chilled Water Piping, ASHRAE Symposium on Chilled Water Systems, January, 1970.

(2) Loudon, A. G., "Heat Loss from Underground Heating Mains", J. I. H. V. E., November, 1957, pp. 196-203.

(3) Eckert, E. R. G., "Heat and Mass Transfer", McGraw-Hill Book Company, 1959, pp. 60-64.

(4) McAdams, W. H., "Heat Transmission", McGraw-Hill Book Company, 1954, page 25.

(5) ASHRAE Handbook of Fundamentals, p. 406, 1967.

(6) Collins, W. D., Temperature of Water Available for Industrial Use in the United States", U. S. Geological Survey, Water Supply Paper 520-F, 1925.

(7) Kusuda, T., and Achenbach, P. R., "Earth Temperature and Thermal Diffusivity at Selected Stations in the United States", ASHRAE Transactions, 1965, and more detailed data in NBS Report 8972 of the same title.

(8) Penrod, E. B., "Variation of Soil Temperature at Lexington, Kentucky from 1952 - 1956", University of Kentucky Engineering Experiment Station, Bulletin No. 57, September 1960.

Table 1

Integrated 10 ft depth average earth temperature data for selected stations in the United States for the thermal diffusivity of 0.025 ft2/hr

STATION STATES	WINTER	SPRING	SUMMER	FALL	YEAR
AUBURN, ALABAMA	57.	61.	74.	70.	65.
DECATUR, ALABAMA	49.	53.	69.	66.	59.
PALMER AAES, ALASKA	29.	30.	45.	41.	36.
TEMPE, ARIZONA	58.	63.	77.	74.	68.
TUCSON, ARIZONA	65.	69.	80.	80.	73.
BRAWLEY, CALIFORNIA	66.	73.	87.	85.	77.
DAVIS, CALIFORMIA	57.	60.	76.	73.	67.
FT. COLLINS, COLO.	40.	44.	62.	57.	51.
STORRS, CONN.	43.	44.	62.	59.	52.
GAINESVILLE, FLA.	61.	71.	79.	78.	73.
ATHENS, GEORGIA	55.	60.	75.	73.	66.
MOSCOW, IDAHO	40.	42.	55.	53.	47.
LEMONT, ILLINOIS	42.	44.	64.	60.	52.
URBANA, ILLINOIS	42.	47.	65.	61.	53.
WEST LAFAYETTE, IND	43.	47.	66.	62.	54.
AMES, IOWA	39.	44.	67.	61.	52.
BURLINGTON, IOWA	42.	48.	71.	66.	56.
CASTANA, IOWA	36.	41.	66.	61.	51.
COUNCIL BLUFFS, IOWA	42.	47.	67.	63.	55.
SARATOGA, IOWA	37.	39.	64.	58.	49.
SPENCER, IOWA	37.	41.	62.	58.	50.
GARDEN CITY, KANSAS	42.	51.	71.	67.	58.
MANHATTAN, KANSAS	44.	49.	68.	65.	56.
MOUND VALLEY, KANSAS	47.	54.	72.	69.	60.
LEXINGTON, KENTUCKY	47.	51.	69.	65.	58.
UPPER MARLBORO,	44.	49.	66.	64.	56.
EAST LANSING, MICH.	41.	41.	61.	58.	50.
FAIRMONT, MINNESOTA	38.	43.	63.	57.	50.
FARIBAULT, MINNESOTA	36.	38.	59.	54.	47.
ST. PAUL, MINNESOTA	38.	38.	62.	57.	49.
WASECA, MINNESOTA	36.	47.	64.	54.	50.
STATE UNIV., MISS.	56.	62.	76.	74.	67.
FAUCETT, MISSOURI	43.	45.	65.	61.	54.
KANSAS CITY, MO.	44.	48.	65.	62.	55.
SIKESTON, MISSOURI	48.	54.	72.	68.	60.
SPICKARD, MISSOURI	47.	48.	63.	64.	55.
BOZEMAN, MONTANA	36.	36.	53.	49.	43.
HUNTLEY, MONTANA	40.	43.	63.	57.	50.
LINCOLN, NEBRASKA	40.	44.	65.	61.	53.
NEW BRUNSWICK, N.J.	44.	47.	63.	61.	54.
ITHACA, NEW YORK	41.	41.	58.	54.	49.
COLUMBUS, OHIO	43.	46.	63.	61.	53.
COSHOCTON, OHIO	42.	45.	61.	59.	52.
WOOSTER, OHIO	42.	45.	62.	59.	52.
BARNSDALL, OKLAHOMA	53.	56.	73.	70.	63.
LAKE HEFNER, OKLA.	52.	56.	74.	72.	64.
PAWHUSKA, OKLAHOMA	50.	54.	72.	68.	61.
OTTAWA, ONTARIO	39.	37.	58.	52.	47.
CORVALLIS, OREGON	47.	50.	64.	60.	55.
HOOD RIVER, OREGON	43.	48.	59.	57.	52.
MEDFORD, OREGON	48.	52.	64.	61.	56.
PENDLETON, OREGON	41.	49.	65.	61.	54.
STATE COLLEGE, PA.	42.	44.	63.	59.	52.
KINGSTON, R. I.	41.	41.	58.	57.	50.
CALHOUN, S.CAROLINA	52.	57.	73.	70.	63.
MADISON, S. DAKOTA	36.	38.	59.	55.	47.
JACKSON, TENNESSEE	50.	55.	69.	64.	59.
TEMPLE, TEXAS	61.	65.	81.	77.	71.
SALT LAKE CITY, UTAH	40.	45.	60.	56.	50.
BURLINGTON, VERMONT	39.	38.	59.	54.	48.
PULLMAN, WASHINGTON	40.	45.	58.	52.	50.
SEATTLE, WASHINGTON	46.	50.	59.	56.	53.
AFTON, WYOMING	41.	42.	56.	53.	48.

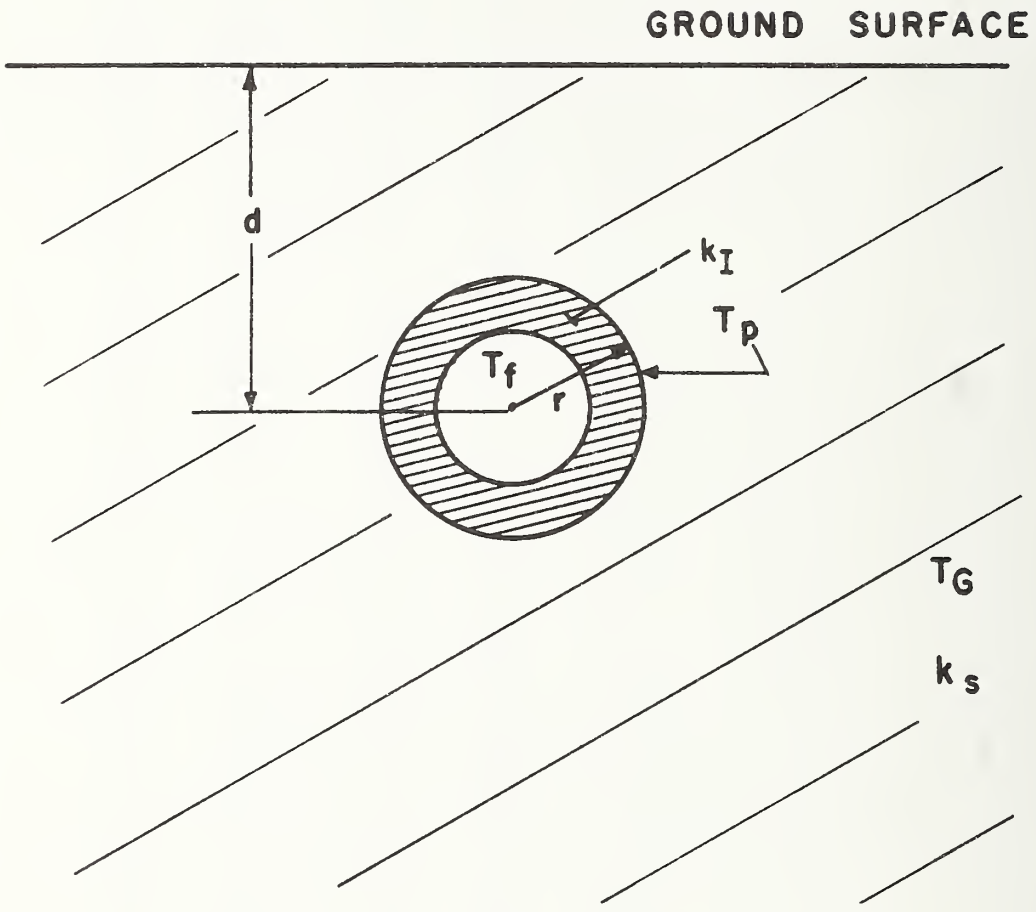

Fig. 1 SINGLE UNDERGROUND PIPE SYSTEM

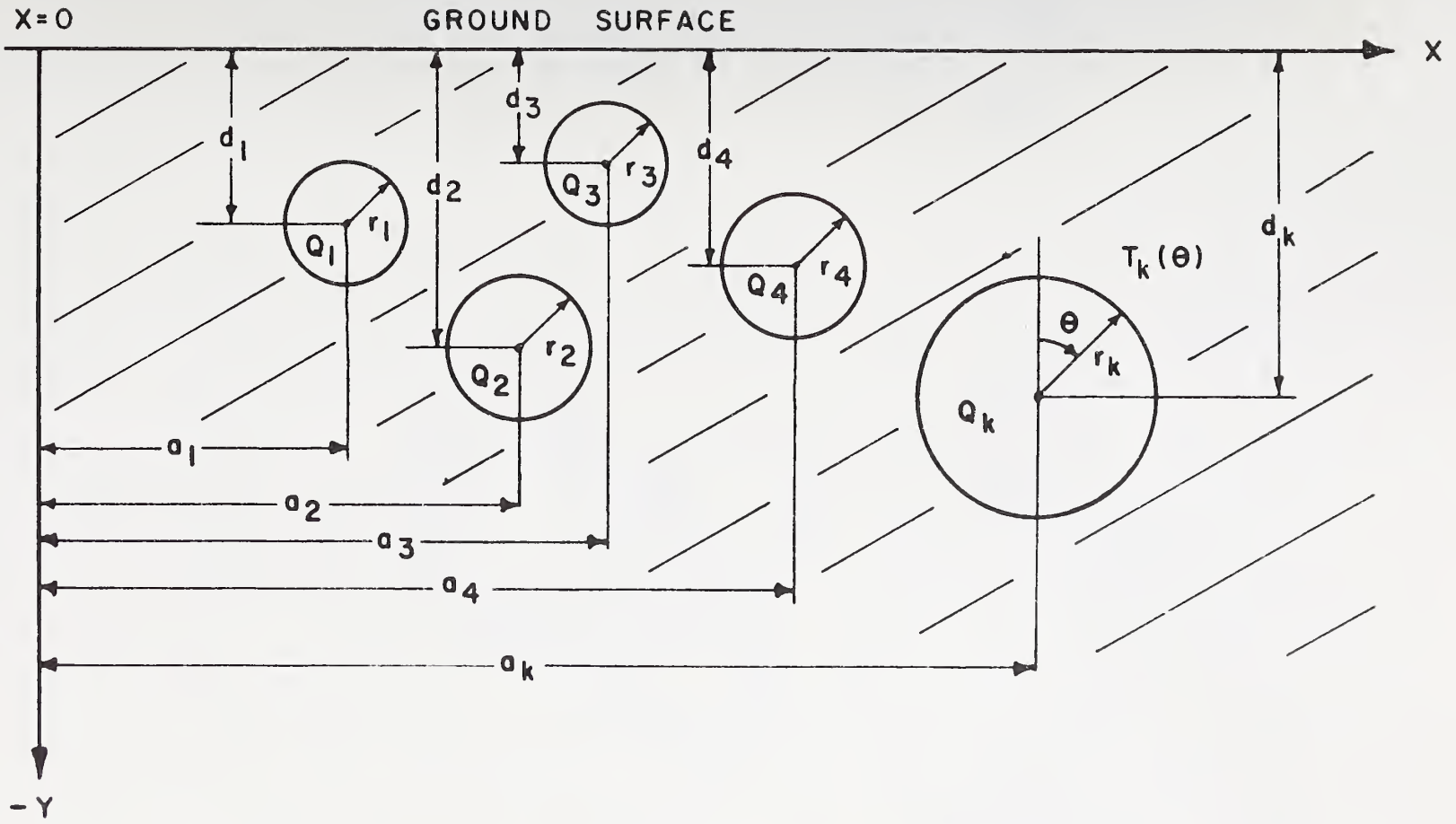

UNDISTURBED AVERAGE EARTH TEMPERATURE, T_G

UNDISTURBED AVERAGE THERMAL CONDUCTIVITY, k_s

Fig. 2 MULTIPLE UNDERGROUND PIPE SYSTEM

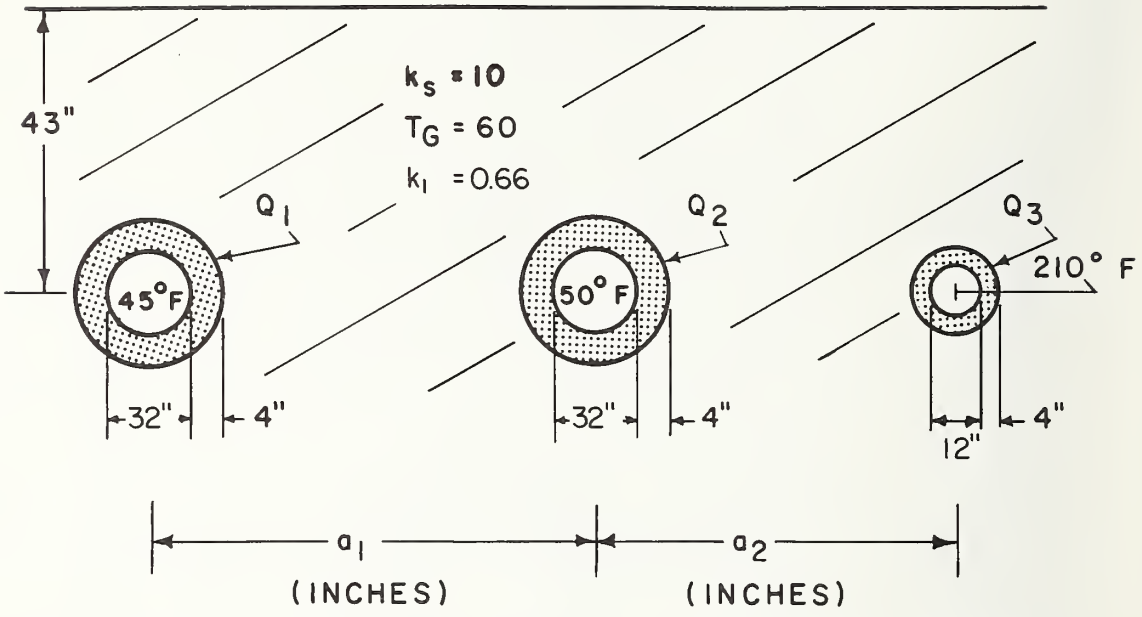

CASE	a_1	a_2	Q_1	Q_2	Q_3
1	60	50	-17.89 (10)	-20.30 (88)	81.24 (2)
2	55	45	-18.15 (12)	-21.46 (98)	81.57 (3)
3	50	40	-18.48 (14)	-22.82 (111)	82.00 (3)
4	45	35	-18.89 (16)	-24.46 (126)	82.55 (4)
5	∞	∞	-16.23	-10.82	79.40

Fig. 3 SAMPLE CALCULATIONS FOR MULTIPLE PIPE SYSTEMS

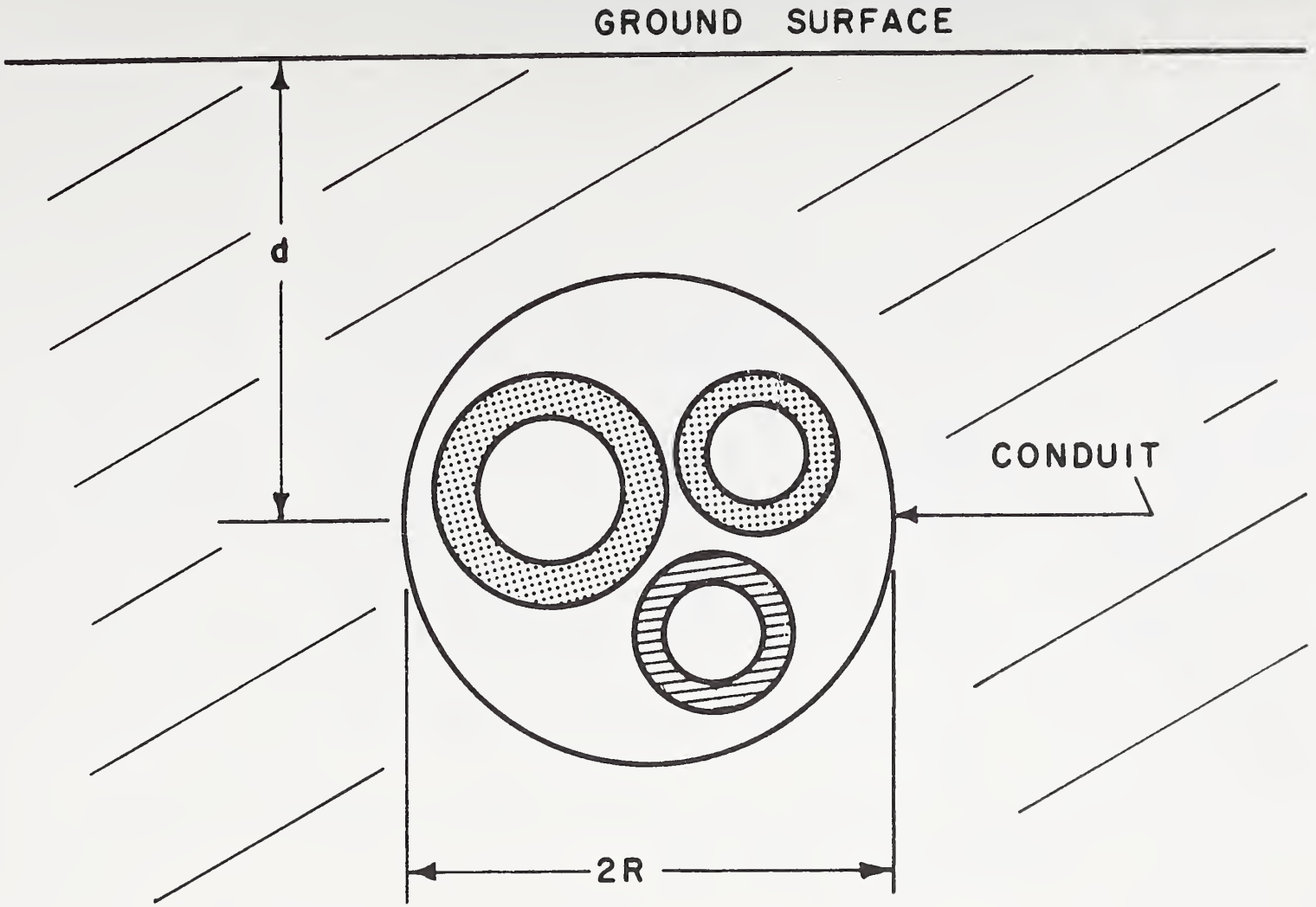

Fig. 4 PIPES IN AN UNDERGROUND CONDUIT

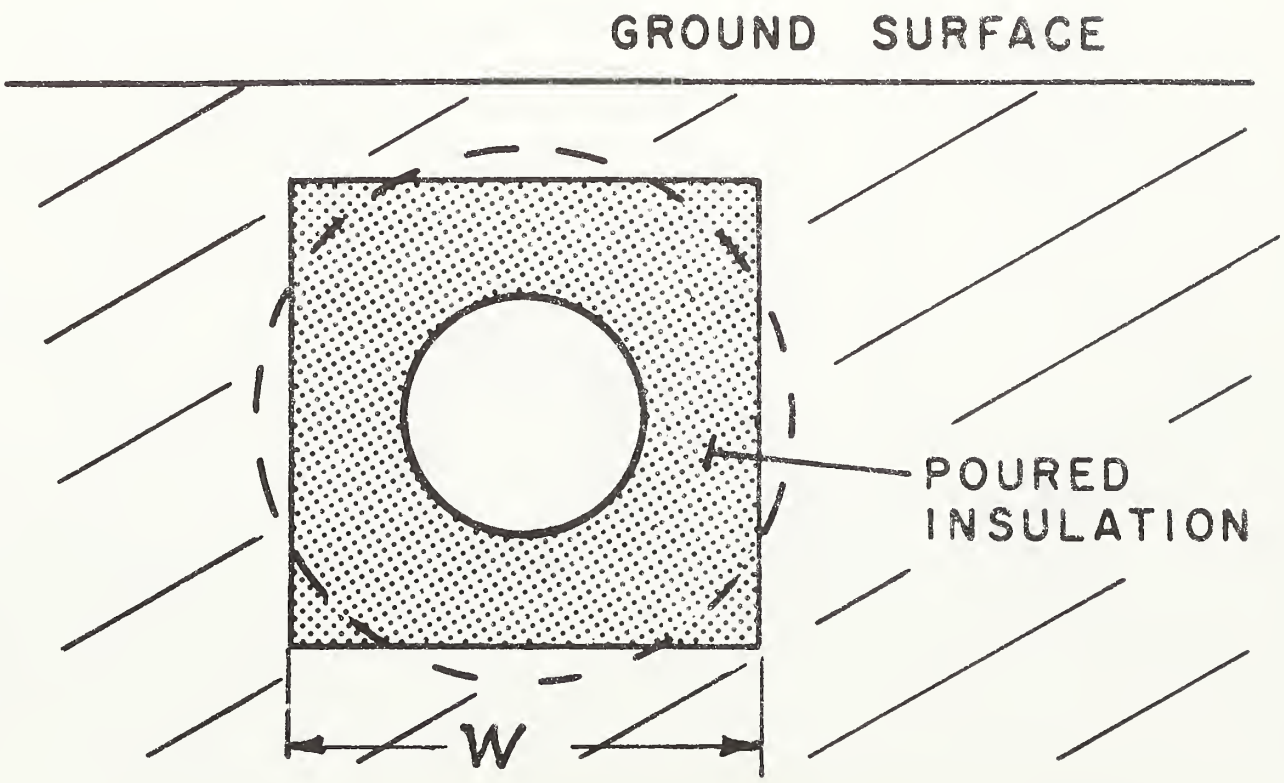

Fig. 5 UNDERGROUND PIPE IN AN INSULATED TRENCH

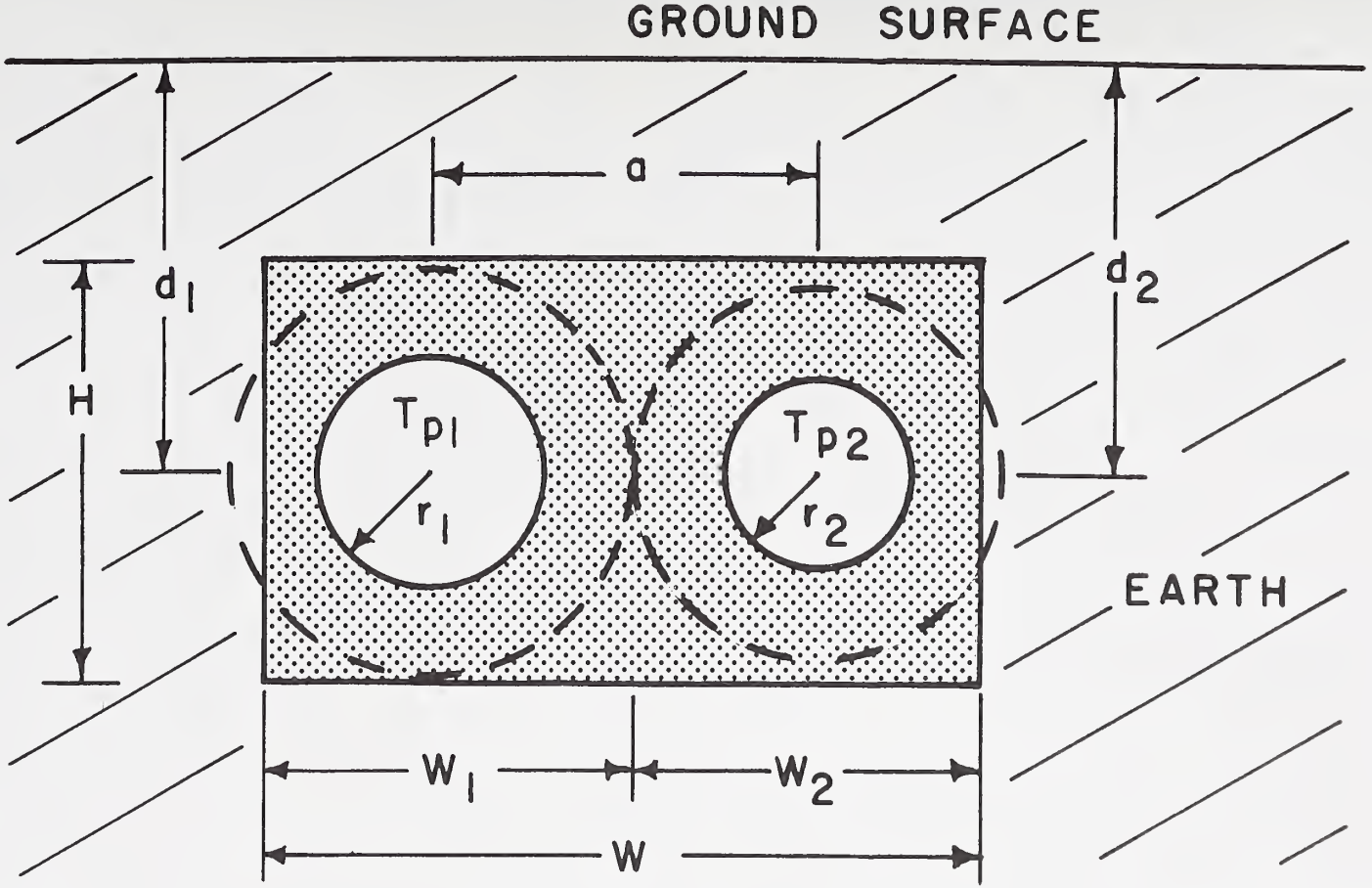

Fig. 6 TWO UNDERGROUND PIPES IN AN INSULATED TRENCH

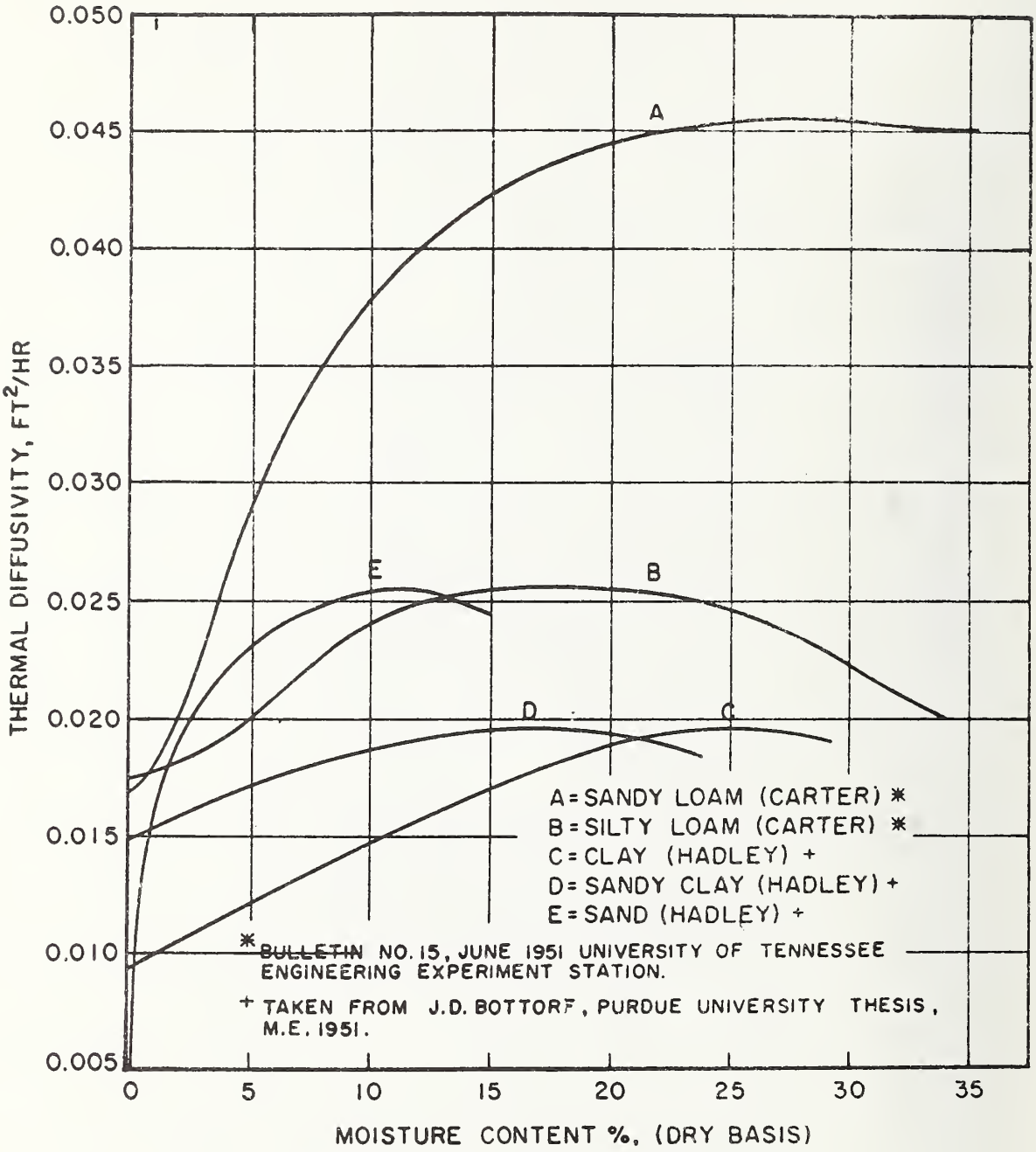

Fig. 7 THERMAL DIFFUSIVITY PLOTTED AGAINST MOISTURE CONTENT OF VARIOUS SOILS

Fig. 8 CEMENT ASBESTOS CHILLED WATER PIPES BETWEEN THE PENTAGON AND FOB #2 EXCAVATED FOR THE HEAT FLOWMETER INSTALLATION

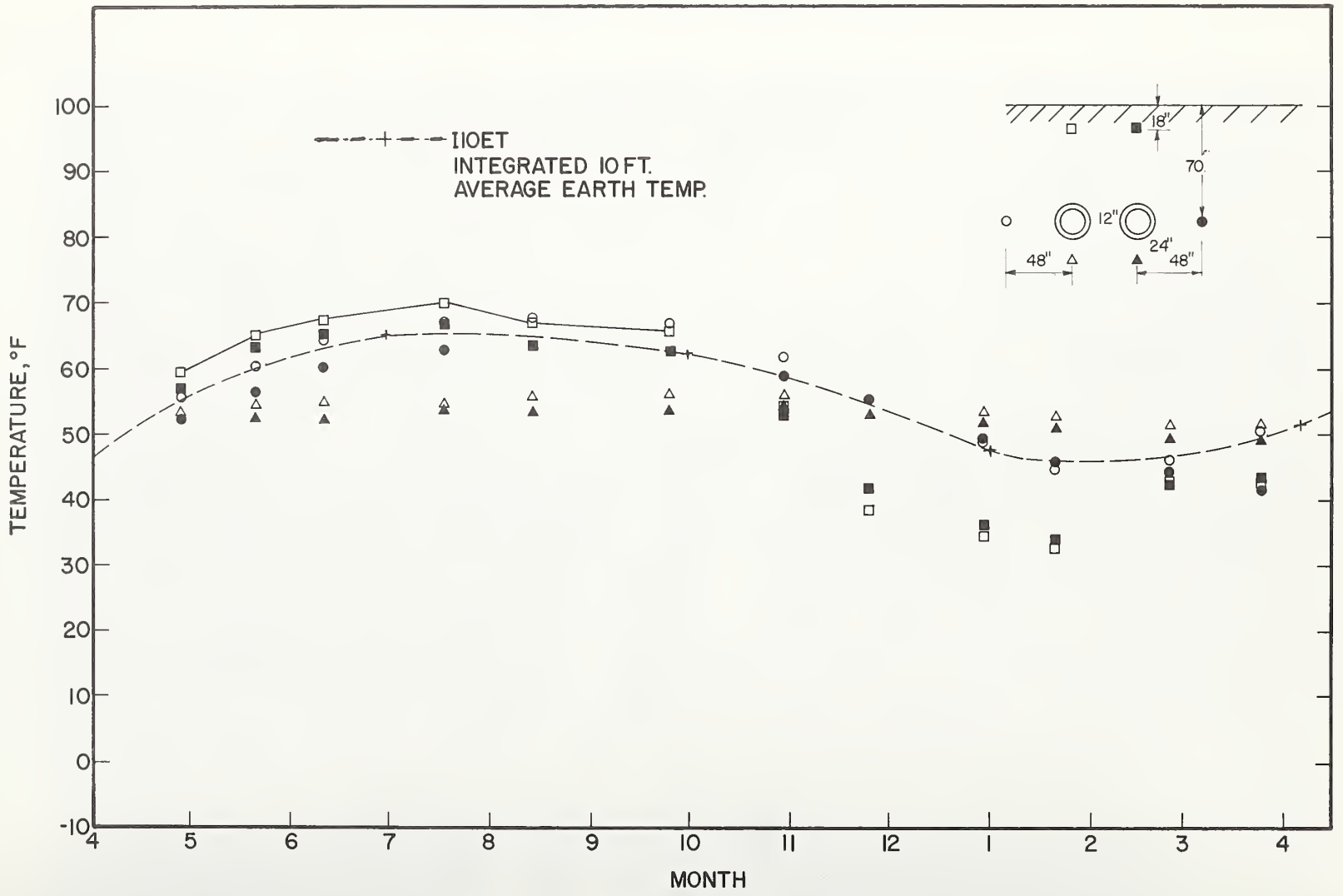

Fig. 9 MONTHLY PROFILES OF GROUND TEMPERATURES AROUND THE CHILLED WATER PIPES OF Fig. 8

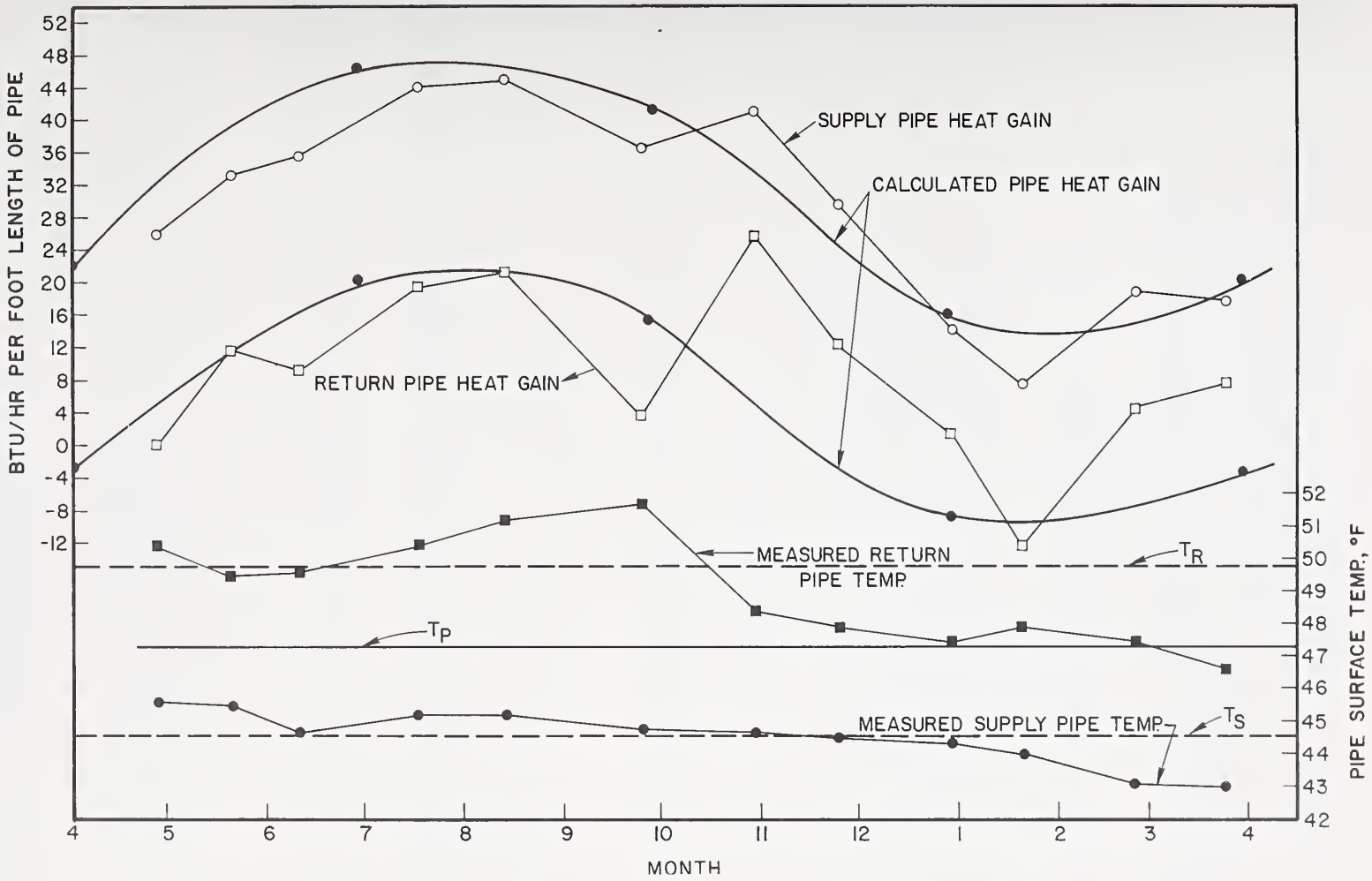

Fig. 10 MONTHLY PROFILES OF HEAT FLOWS AND TEMPERATURE AT THE SURFACE OF THE CHILLED WATER PIPES SHOWN IN Fig. 8

Design Criterio of Underground Heot and Chilled Water Distribution Systems for Corrosion Protection

J. H. Fitzgerold, III, P.E. ond K. J. Moody[1]

The Hinchmon Compony
Corrosion Engineers
Detroit, Michigon 48201

Corrosion foilures occur in oll types of heot ond chilled water distribution systems unless precoutions ore token. Foilures ore expensive ond couse shutdowns, hozordous conditions, occasionol cotostrophies ond inconvenience to involved personnel and the general public. Corrosion leoks couse wetting of thermol insulotion, resulting in thermol losses. For new construction, o corrosion survey should be made to determine best course of oction, moterials to use ond the precoutions needed to ochieve the desired life of the piping. Cothodic protection is necessory for steel conduit or direct buriol piping. Protection is olso needed for steel pipe in insulative backfills. Mini-tunnels need to be kept dry or protection used. Internal corrosion is controlled with inhibitors. Nonmetallic moteriols ond vorious meons of construction should be considered to estoblish the best long-term opprooch. For existing systems, o survey should be mode to determine if protection, repoirs or replocement is the best course. Severol cose histories illustrate typicol corrosion problems.

Key Words: Anodes, cothodic protection, cootings, corrosion, deteriorotion, inhibitors, moterials selection, nonmetallics, rectifiers, water treotment.

1. Introduction

Corrosion is o major couse of foilure in heot ond chilled woter distribution systems. Failures will occur in oll the different commonly used systems unless properly engineered precoutions ore token to protect the pipe (1)[2].

Modern industriol plants, hospitals, universities, cities ond other institutions utilize these systems ond corrosion foilures become expensive, couse shutdowns, hozordous conditions, occasionol cotastrophies ond result in inconvenience to involved personnel ond the generol public alike. Corrosion leoks also couse wetting of thermol insulotion, thus cousing excessive thermol losses.

When plonning new construction, or when o corrosion problem or potentiol problem is discovered, o corrosion study should be mode to determine the best course of action. Vorious opproaches such os cothodic protection, use of nonmetollic moteriols, utility tunnels ond future or continued foilures must be compored, considering economics, sofety, procticability, etc.

This paper makes specific recommendotions for corrosion protection of vorious types of thermal systems, both new ond existing. Severol cose histories ore given as examples of typicol corrosion problems.

The owner must recognize that corrosion control may not poy off in the first 5-10 yeors but, in o thermol system thot is designed to last perhops 50 yeors, the sovings from corrosion control become quite significant.

---

[1] Vice President ond Project Manager, respectively.
[2] Figures in parenthesis indicate the literature references ot the end of this paper.

2. Corrosion and Corrasion Cantral

Carrosion is an electrachemical reaction between a metal and its environment. It always involves the flow of direct current electricity thraugh an electralyte (such as soil or water) fram ane paint to another on the metal surface. Figure 1 illustrotes the basic carrasion cell.

There are two majar causes af underground carrasian - golvanic corrasion and stroy current. Galvanic corrosion is in effect a battery. Current flaws from the anode (carroding) area to the cathode (protected) area becouse of the potentiol difference between them. A current will be generated when two dissimilar metols are cannected. Golvanic corrosion olso results from dissimilar surfoce conditions, differences in oxygen concentration or differences in environment around a structure.

The second mojar type af carrosian is caused by the discharge of stray direct current from the surfoce of a buried metol. Stray currents may emanate from welding or plating operations, electrified railwoys, cathodic protection systems and ather sources of direct current. In traveling through the earth, these currents frequently are picked up by a buried or submerged structure at one point and discharged at anather. Corrosian occurs at the discharge paint.

Coatings, jackets, corrosion-resistont metals, nonmetallics ond cathodic protection ore used ta combat corrosion. Cathodic protection is an electrical pracess involving the flow of direct current from speciol anodes to the structure to be protected. There are two types of cathadic pratectian systems, galvanic and impressed current. In the galvanic system, an anode, usually made of magnesium ar zinc, is located odjacent to the structure and connected to it. Because af the potential difference between the anode and the structure, a battery (corrosion cell) is creoted and current flows from the anode ta the structure. The impressed current system utilizes anodes usuolly made of high-silicon cast iron or grophite. These are connected ta a rectifier ar other source af direct current, which in turn is wired to the structure. Figure 2 illustrates cathadic pratectian.

Nan-metallic piping is also used ta cambat corrosian. These materials, hawever, also have limitations ond can be adversely affected by temperature, pH or, as with reinfarced concrete, stray current.

Instead af being buried, lines are sametimes installed in tunnels. While these are usually very expensive, there are times when a tunnel may be the best answer. This is particularly true when many utilities and perhaps o pedestrian passage share the same tunnel. Overhead canstruction is sometimes used, althaugh aesthetics, cost and practicability often make buried structures mare desiroble.

3. Design Criteria for New Canstruction

3.1 Initial Survey

Corrosion control should be a regular part af oll new canstructian plans. A preconstructian carrosion survey should be made. This yields valuable soil and stray current infarmation. If there is any possibility af stray current carrosian, control measures shauld be included in the system design. If sail is similar ta that in a knawn high leok orea, similar leakoge is to be expected on the new pipe.

When all foctors are known, an economic study should be made ta determine the best course of action. The installed ond maintenance casts of variaus materials need to be compared. Then a judgment can be made to establish the best long-term system far the situatian.

3.2 General Foctors and Recammendatians

With heat systems, most external problems occur an the candensate or return lines since they are at a relatively high temperature below the bailing paint af water and thus do nat tend ta dry the environment about them the way a steam supply line generally does. A recent study by the Academy of Science confirmed this (2). The Federal Government, incidentally, has hod much experience with buried heot piping. Leoks frequently develop in six to ten yeors ofter instollotion. The previously mentioned publicotion of the Acodemy of Science reparts on evaluotion of over 200 instollotians of vorious types of systems. Vorying degrees of corrosion were found at each one.

Chilled woter lines ore frequently insuloted in the some manner os heot distribution piping. Since they operote ot common ground temperotures, they moy be more subject to corrosion than hot piping.

A secandary effect af carrasian failure is that leaks cause wetting of the thermal insulatian. This reduces thermal efficiency and causes excessive heat lasses.

It is generally good practice to pravide caating and cathodic pratectian for steel pipe. Coating alane does not provide adequate protectian since accelerated failures often accur at coating flaws (3,4). For chilled water lines, standard caal-tar enamel coating with felt wrapper may be used. Heat piping requires a caating such as coal-tar epoxy that will withstand the temperature.

Electrical continuity of the piping is essential when using cathodic pratection. Thus, welded pipe should be used wherever possible. Mechanical or screw jaints require banding.

Cothadic protection must be maintained if it is to remain effective over the yeors. Impressed current systems require continuous electric power; changes in utility canfiguratian, loss of a dielectric fitting or damage from later construction can cause loss af pratection. Galvanic anodes, which usually lost 10 to 15 years, must be replaced when dissipated. Periodic surveys are necessary to check the level of protection and make any applicable adjustments (5).

Gaod operating pracedures cantribute significantly ta corrosian cantrol. Heat systems having a supply line that operotes above the boiling point of water should be put into service as soan as passible and kept in operation all year round. Periodic shutdowns, such as during the summer or aff season, can contribute to pitting of the supply line.

Interior carrosian also cantributes to failures and this can occur in bath supply ond return lines. This is usually due to lack of or inadequate water treatment. When interiar carrosion is of concern, a study should be mode ta determine the couse and to select or modify treatment occardingly. It is important to recognize that inhibitors must be used in the proper concentratian. The maintenance man wha thinks that "If a little bit's good, a lot's better", or who tries ta save money by skimping an the treatment does his company a disservice. Tao much or too little inhibitar can be worse than none at all.

For a given medium (steam, hot water, etc.), interiar corrosion affects the various distributian systems obout the same. External corrosian, hawever, is as varied as the number of thermal systems that obaund today. The remaining portions of this section give specific recammendations ta prevent external carrasian for different types of thermal distributian systems.

3.3 Conduit Systems

These systems consist of a carrier pipe or pipes surrounded by thermal insulatian and encased in an exterior conduit. Metal, fiberglass reinforced plastic and asbestas cement canduits are used. The carrier pipe is neorly always steel, although copper is sometimes faund. Occasionally, steel and copper pipes have been used in the same conduit; this practice leads ta serious galvanic corrasian of the steel due to the cantact of dissimilar metals when the insulation becomes wet. Except in pressure tight conduit which, if metal, is protected against penetration or is nonmetollic, and thus assumed to remain dry, dissimilar metals should not be used.

Non-pressure tight conduits, which ta our knawledge are no longer being made but many af which are still in use, present special problems. Water can enter the canduit through joints or back up from flooded manholes. This saaks the insulotion, causing thermal as well as corrosion losses.

The problem with conduit systems is thot one connot protect the corrier pipe unless onodes were instolled within the conduit. As this is not o stondard proctice, it is necessory to prevent the entry of woter into the conduit. This hos led to the development of the pressure tight conduit; it then becomes necessory to protect the exterior cosing ogoinst corrosion penetrotion.

When o leok occurs in the carrier pipe, the water con flood the conduit ond couse further corrosion ot other places. Leoks usuolly require replocement of o section of the conduit since it is difficult to repoir on individuol leok os one can do on o direct burial line.

When steel conduits are used, cooting ond cothodic protection should be opplied. Conduit manufacturers recommend this, too. In many environments, however, pressure tight asbestos cement conduits should be considered. Asbestos cement conduit is not recommended where soil pH is below 5.0. Fiberglass reinforced plostic (FRP) conduits should also be considered os olternotive to steel.

3.4 Insulative Backfill

Both insulating concrete ond loose hydrocarbon fill ore used. If concrete remains wet, or becomes crocked, corrosion of the pipe can occur. Cathodic protection can be used to mitigate corrosion of pipes backfilled with this material.

Hydrocorbon fills are of two types, cured and non-cured. The cured type is supposed to form a consolidoted zone of solid moteriol around the pipe upon heating. Next comes the sintered, or portiolly-cured zone, ond beyond this, where the moterial remoins gronular, is the loose zone. If the moterial remoined completely impervious, it would protect the pipe from corrosion.

The theory behind the cured-type backfill is that heat causes it to horden (cure) and bond to the pipe. It cannot, however, be considered adequate corrosion protection. This is because it is not a perfect cooting; where it cures and adheres to the pipe, it acts as a coating, but there ore still breoks and pinholes thot exist ond corrosion will occur at these points. Figure 3 shows a corroded condensote line thot was backfilled in hydrocarbon thermal insulation.

The chonce of crocks is reduced if the piping is kept at high temperatures (obout 300°F); return or condensate lines are usually well below this temperature ond experience hos shown that most foilures occur on such return piping and the bockfill is usually in poorer condition (more breaks, sometimes not cured) around the return line than around the supply pipe.

The bockfill itself is inert; however, when it does not cure, moisture reaches the pipe and corrosion occurs. Also, should the trench settle or a washout occur, earth will come into contoct with the pipe and corrosion will toke place becouse of the dissimilor bockfills. This some phenomenon can occur if earth or other contominants become mixed in the bockfill during construction.

Poor workmanship is olso a factor. Improper tamping, insufficient moterial, improper curing (wrong temperature or time of cure) and allowing foreign material to mix with the hydrocorbon are among the problems found. The presence of foreign moterial in the backfill is not necessarily proof of poor workmonship. In a test in California, selective bockfills were instolled under carefully controlled conditions. Yet, upon excavotion severol yeors loter, clods of native soil were found in the speciol bockfill (6). Soil stresses, water migration and trench settlements cause movement of soil particles.

To provide complete protection for steel piping installed in insulative concrete or hydrocarbon backfill requires cothodic protection. Well-cured and bonded backfill will reduce the protective current requirements just as a stondord pipeline coating does. Use of cathodic protection is also recommended in literature on thermal insulation (7). Frequently, a nonmetallic or perhaps a copper line may be the best choice. Copper also corrodes in some environments, so a preconstruction analysis is needed before firm recommendations are made.

In on attempt to prevent corrosion of pipes in insulotive backfill, a "waterproof" membrane is sometimes placed in the trench and subsequently wropped oround the bockfilled lines. It has been our experience, however, to find that the membrone often teors or leaks later on, odmitting woter. Becouse of the electricol insuloting quolities of the membrane, cothodic protection cannot be opplied to the pipes within it unless onodes are installed under the membrane itself. If such a membrone is to be used, supplementol anodes, perhaps zinc or mognesium ribbons, should be placed in the backfill.

Pipes loid in insulotive backfill should not rest on bricks, pieces of wood or other supports. Severe concentrotion cell corrosion can occur ot the point where the pipe contocts the support, and it may be difficult to protect ogoinst it. Pipe supports should be removed as backfilling proceeds.

It is olso poor proctice to use dissimilor metal pipes (e.g., copper and steel) in the some trench. While cathodic protection con overcome the resultont galvanic cell, hot-spot corrosion could occur ot points where perhops the pipes touch or were otherwise shielded from protective current.

3.5 Mini-Tunnels

Mini-tunnels consist of either commerciolly-produced or homemade concrete boses with tile covers, concrete boxes or various combinotions of these, containing the piping and thermal insulotion. To protect effectively against corrosion, it is essential that the mini-tunnel remoin dry. Such installotions must be well-drained ond the owner must have the ossuronce thot the droins will not plug up. Foilures in this type of system occur when the droins fail, or water backs up within the tunnel from some other couse.

Zinc ribbon onodes can be used within the tunnel to guord ogoinst corrosion should flooding occur. Here again,

nonmetallic or perhaps copper pipe may be more desirable than steel.

Polyurethane faam insulation is being used naw also. Filling the tunnel, the foam cannot be soaked as can ather insulations, and it aften offers gaad pratection for the piping. Some designers include zinc ribbon anades alang the pipes as o precautian against any possible water intrusion.

3.6 Preformed Cellular Glass

This material is strapped ta the pipe. The seams may ar may nat be taped. Even with toped seams, a perfect seal cannat be guaranteed and water may migrate ta the pipe surface. Steel pipe should be pravided with coating and cathadic protection.

Here again, because of the electrical insulating qualities of the glass, cathodic pratection must be ploced under the thermal insulation. Figure 3 shows a typical installation using zinc ribbon.

3.7 Direct Burial

Recently, condensote or return lines have been buried withaut any thermal insulation. In these cases, the pipe will behave as any ather buried pipe and corrosian may cause failure. Where steel pipe is used, it shauld be provided with coating and cathadic protection. The caating chosen must be compatible with the temperature of the line.

Cost iron ond, in mare recent years, ductile iron are sometimes used far thermal systems. These materials cansist af flakes or nodules of graphite (carbon) in an iron motrix. Carrosion of these metals causes a loss af the ferritic canstituent, thus leoving behind the graphite and praducts af carrosion. This phenomenon, known as graphitizatian, affects cast iran and ductile iron about the same. Graphitized pipe often retains the appearance af sound pipe, leading abservers to believe that the structure has remained corrosion-free for many years. If not subjected ta external ar internal stress, graphitized pipe will often give long, leak-free service. While it is certainly true that sound cast-pipe will break when subjected ta sufficient stress, experience has shawn that the majority of cast iron pipe breaks occur where the pipe has been weakened through carrosian. The break itself is due to an external force, but it must be considered a corrasian failure because the pipe would nat have broken had it not been weakened by graphitizatian (8).

Cathodic protectian should be considered far cast iran pipe in sails af resistivity below 5000 ohm-centimeters, porticularly if drainage is paar. Pipe jaints should be banded, however, even if cathadic pratectian isn't used.

Soils af less than 5.5 pH are aggressive ta asbestos-cement and prestressed-cancrete pipe. Sulfate-resistont concrete is necessary if the sulfate cantent of the sail exceed 0.3 percent. Stray currents can cause serious corrosion in reinforced cancrete pipe.

Cansideration shauld alsa be given ta FRP ar ather plastic pipe. Sametimes copper is a goad alternate to ferraus metal.

Very often, hat water is distributed to radiatars with piping lacated under a floor slab. There are two main causes af carrosian af such pipe. In same cases, capper and steel pipe are used together in the system, thus creating a galvanic cell and accelerating the deterioration of the steel. Then taa, the risers ta the radiators are frequently grouted in where they pass thraugh the slab. This leads ta a cell between the steel in the cancrete and that in the soil, with the portion of the pipe in the sail being attacked. Gaad practice dictates that dissimilar metals shauld nat be used together and that pipes passing through concrete should be insulated fram it with a nonmetallic sleeve and seal.

Where steel pipe is used far such under-flaor piping, cathodic pratection and, if feasible, coating shauld be used. The pipe must be electrically cantinuaus, sa welded pipe canstructian should be specified. Serious consideratian should be given to installatian af the pipe averhead or in dry trenches, and the ecanomics and maintenance factors of this versus buried piping should be worked out.

4. Existing Systems

On existing pipe systems, detailed records of leaks should be maintained. Cast iron pipe breaks should be examined carefully to determine if carrosion has been the cause.

Plotting failures on semi-lag paper will aid greatly in determining the majar cause of trouble. If a straight line

plot develops, then corrosion represents the overwhelming influence. Such plots can be extrapolated and repair costs forecast accurately. The estimation of future leakage costs can then be compared with the costs of cathodic protection or major structure replacements. By indicating the leaks on a system map, the most corrosive areas can usually be delineated.

A study can be made to determine the best approach. The economics and practicability of various alternatives can be examined and the best course of action determined. If the structure is not too far gone, cathodic protection may reduce or eliminate further leakage. On the other hand, structure replacement with either protected metal or a non-metallic material may be a better solution.

In some instances, cathodic protection may be only partially effective. This is particularly true if the piping is badly deteriorated, there is much shielding of one pipe by another, or if the piping is not electrically continuous. In the latter case, the pipe deterioration may be accelerated as the protective current may enter the soil from the pipe at a discontinuity while traveling back to the cathodic protection rectifier. A careful study should be made to determine the feasibility of cathodic protection before attempting to apply it to an existing piping network. Figure 4 shows a leak history curve from a library piping subfloor system. Note that the protection slowed down the leakage, but did not stop it. The library was subsequently expanded and a new heating system placed in the entire building with piping installed in dry floor trenches.

5. Case Histories

At an eastern college, the heat distribution system consisted of about 20,000 feet of pipe in a combination of steel conduit, insulative backfill and split tile. The 20-year old system was leaking so badly by 1969 that excessive make-up water alone cost the University some $19,000.00 annually. In addition, a four-man crew spent about 50% of its time repairing corrosion leaks. A corrosion survey showed active corrosion on over 50% of the piping. The pipe, particularly the conduit sections, had deteriorated so badly that replacement with asbestos-cement conduit rather than protection of the existing structures was recommended. A further, detailed leak survey of the insulative backfill and split tile sections indicated such severe conditions that major replacements were recommended. Figure 5 shows a typical failure in insulative backfill.

At a Michigan industrial plant, a 200-foot length of metal conduit piping had been replaced at approximately three-year intervals due to exterior corrosion. The line lay in very corrosive soil under a coal pile. Cathodic protection was installed at the time of the last replacement about four years ago (1968); there have been no further failures.

At a Michigan college, a steam distribution system had been installed using a commercially-produced tile-concrete duct with mineral wool insulation with the steam and condensate lines in the same duct. About four years later, corrosion leaks occurred in the wrought iron condensate line. Investigation revealed the insulation to be saturated with water; extensive corrosion was found on the condensate line. Water apparently was entering the duct through joints in the concrete or it may have backed up from flooded manholes. Drain pipes had been provided, but these had become clogged. It was recommended that every possible attempt be made to dry out the duct. Additional drains were to be installed and manholes were to be kept pumped out.

At a Junior High School in Michigan, failures occurred on the high-temperature hot water return pipe six years after installation in a cured type hydrocarbon backfill. Both the supply and return lines were pitted extensively on the bottom with the corrosion and scaling evident on the rest of the pipe. About 300 feet of the 750 feet of pipe were replaced in the fall of 1967. The new pipe was relaid in a noncuring synthetic insulative backfill and cathodic protection was applied.

At a midwest college campus, about 4000 feet each of steam and condensate distribution piping had been installed in an insulative concrete backfill. Failure due to corrosion occurred approximately four years after installation. Replacement of the steel condensate pipe with a nonmetallic fiberglass-reinforced plastic pipe and cathodic protection of the steam pipe was recommended, at a total cost of about $145,000.00.

Another system (about 300 feet each of steam and condensate) was installed in a "homemade" tunnel at a midwest institutional complex and failed due to corrosion approximately two years after installation. Replacement of the steel condensate pipe with a nonmetallic fiberglass-reinforced plastic pipe and proper operation of the tunnel sump pumps to keep the steam pipe as dry as possible was recommended. This 300-foot replacement cost about $7,000.00.

6. References

(1) Fitzgerald, J. H., P.E., Case Histories and Experiences with Corrosian and Cathadic Protectian in Buried Utilities, Proceedings of the Internatianal District Heating Association (1972).

(2) National Academy of Sciences, Federal Canstructian Council Technical Repart Na. 47, Publicatian 1144, Field Investigatian of Underground Heating Systems (1963).

(3) Geske, L. D., Haw Quality Cantrol Affects Cathodic Pratectian, American Gas Assaciatian Distributian Canference (1964).

(4) American Gas Jaurnal Corrasian Natebaak, Page 78.

(5) West, L. H., P.E., Don't Bury It and Forget It, Plant Engineering (July, 1963).

(6) Sheton, M. J. and Wilkas, B.C., Expasure Tests an Three Types af Pipe, Jaurnal AWWA (Nov. 1955).

(7) Elonka, Steve, Special Repart: Thermal Insulatian, Pawer, (March, 1964).

(8) Fitzgerald, J. H., P.E., Carrasian as a Primary Cause of Cast Iran Main Breaks, Jaurnal AWWA (Aug. 1968).

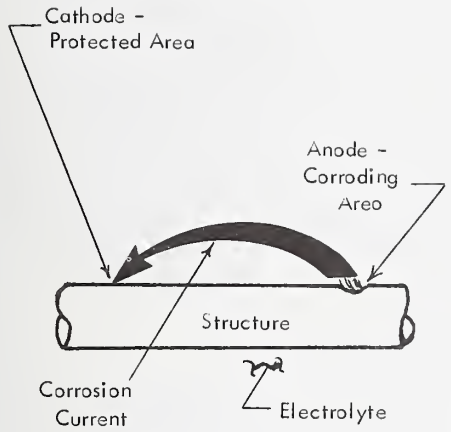

Figure 1
Bosic Corrosion Cell

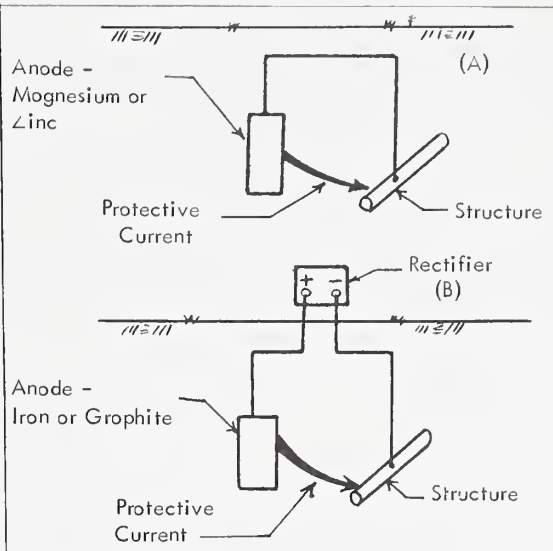

Figure 2
Cathodic Protection
(A) Galvanic Anode (B) Impressed Current

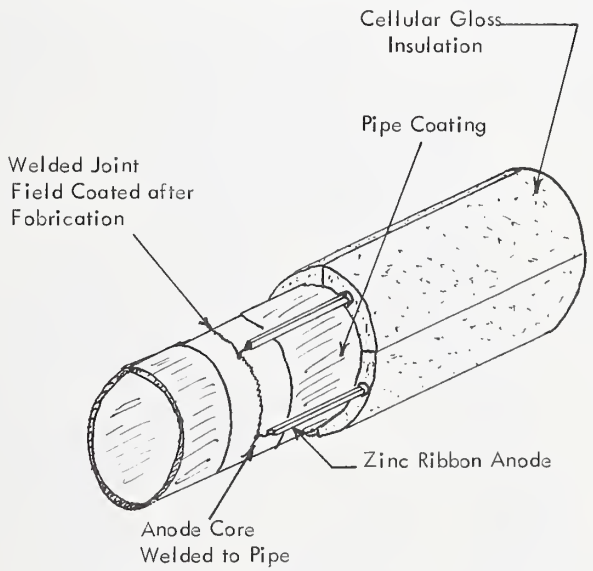

Figure 3
Cathodic Protection of Cellular Glass
Insuloted Steel Chilled Woter Pipe

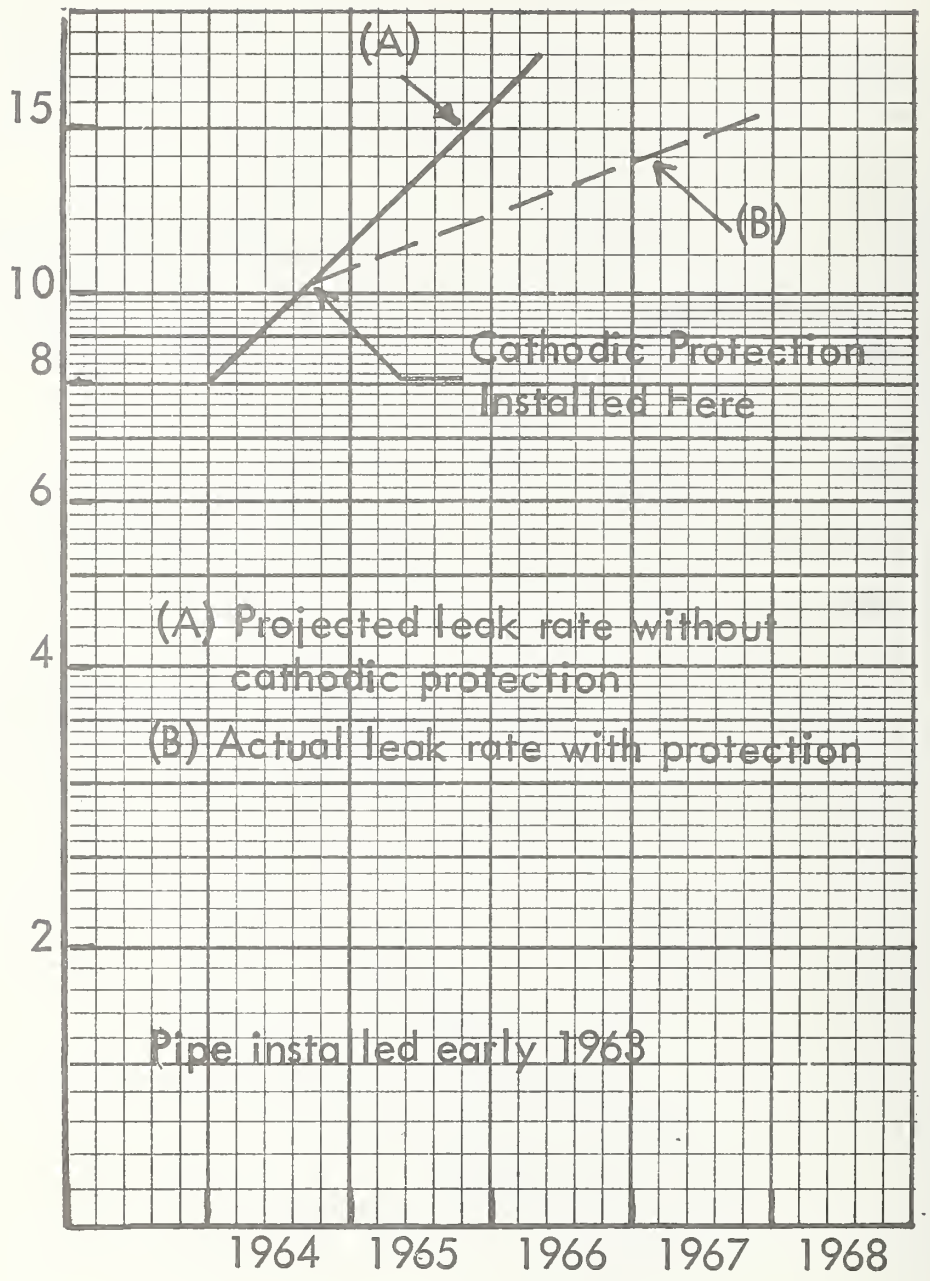

Figure 4
Application of Cathodic Protection to
Sub-floor Heat Distribution Pipe. Note
reduction of leakage.

Figure 5
Corroded Condensote Piping Instolled
in Hydrocorbon Bockfill.

Available Types of Underground Heat Distribution System

Henry A. Borger[1]

Building Research Advisory Board, National Research Council
National Academy of Sciences
Washington, D. C. 20418

This paper briefly discusses the main features and characteristics of various types of currently-available underground heat distribution system, including concrete trenches, clay tile conduits, pressure testable steel conduits, sectionalized conduits, insulating envelopes, and sealed insulation systems.

Key Words: Heat distribution, heating, high temperature water, hot water, insulation, piping, steam, underground piping.

The basic function of an underground heat distribution system is to convey a given quantity of heated fluid (usually steam or hot water) from one point to another, by means of underground piping, without leakage of the fluid or undue loss of heat. If the system is large and/or complex it ordinarily includes a wide variety of different components--such as manholes, expansion joints, pipe anchors, steam traps, and valves. Such components are extremely important to the proper functioning of the system, and another speaker will discuss them in some detail tomorrow. I will discuss the heart of the system--the method used to insulate the carrier piping.

Over the years, a great number of very intelligent people have spent a considerable amount of time, effort, and money trying to devise a good, economical, foolproof scheme for insulating underground piping--but to date, no one has been 100 percent successful. To the uninitiated, this is very hard to understand. After all, it is argued, if we can go to the moon, we certainly should be able to build a satisfactory underground insulated piping system. (I hear that argument so often concerning construction-related problems, I sometimes wish we had never gone to the moon.)

The fact is, underground insulated piping systems have a lot going against them. First is economics; given enough money almost anything is possible. In the real world, however, funds are always short, and there is always competition for the available money. It makes no sense to have a perfect underground insulating system if it is so expensive that no one wants it. Hence, some compromises with perfection are almost always required. Second is the underground environment, which is very hostile to an insulated piping system. To begin with, water abounds underground in most locations, and water is the primary enemy of an insulated piping system since it promotes corrosion of steel and it destroys the insulating effectiveness of insulation (actually, some insulations are literally destroyed by water). In addition, soil, particularly disturbed soil, can move and settle quite a bit. This either puts an added structural load on the system or causes the system to move--neither of which is good for the system. Third is the old out-of-sight out-of-mind syndrome. Since owners do not see an underground piping system, they tend to ignore it and assume it is functioning properly so long as enough steam comes out the end to satisfy their needs. As a result, minor problems with a system are frequently allowed to become major problems before corrective action is taken, and often, in such situations, by the time action is taken there is only one alternative--complete replacement.

Because of such factors, I think it is safe to say that there is no such thing as a foolproof system. This is not to say there are no good systems; actually, there are quite a few. Some, of course, have more limited applications than others, and all have certain inherent advantages and disadvantages, but many types of system will give satisfactory performance if they are suited to the site and operating conditions, and if they are properly installed and maintained.

---

[1]Mr. Borger is Program Manager for the Federal Construction Council, a committee of the Building Research Advisory Board. The views expressed in this paper are those of the author and do not necessarily reflect the views of BRAB or any of its committees.

To facilitate my discussion of various types of available systems, I have prepared a series of illustrations showing systems in cross section. I have purposely made the sketches rough and not to scale in order to permit us to concentrate on operating principals and design concepts, without getting involved in specific features of proprietary products.

Figure 1 shows a concrete trench system. It is essentially a poured-in-place reinforced concrete box with removable concrete lids. The joints in the concrete lid are ordinarily sealed with some type of mastic material. Frequently, handles are installed in the concrete lids to permit them to be easily removed and replaced. Pipes are insulated with preformed insulation--now usually calcium silicate. The insulated carrier pipes are supported on steel rollers of some type, which are imbedded on the sides of the concrete trench. A concrete trench is sometimes referred to as a free-draining system, which means that it is designed in such a way that any water which leaks into the trench will drain into the manhole or building to which the trench is connected. The concrete trench is extremely durable, almost indestructible. It is a nonproprietary type of system, which means that any contractor can build it. Its main drawbacks are that it is quite expensive to construct compared to other types of system, and it is very difficult to make watertight; in fact, with high ground water conditions concrete trenches frequently leak profusely. In order to operate satisfactorily means must be provided to remove the water which drains into the trench; where water conditions are bad this can be difficult.

Figure 2 shows a half-round clay tile system on a concrete base. As the name implies, the system comprises a concrete base on which is constructed a tunnel using half-round clay tiles. (In the past systems of similar configuration have been built using half-round steel culvert sections in place of the clay tiles.) The insulated carrier pipes rest on steel rollers similar to the type used in concrete trenches. Like the concrete trench, this system is a free-draining type system. Half-round clay tile systems are quite durable and impervious to corrosion; however, the tiles are brittle and subject to cracking. The operating characteristics of the system are similar to concrete trench systems: in other words they tend to leak; however, the cost is probably somewhat lower than a concrete trench.

Figure 3 shows a full-round clay tile system which is quite similar in construction to the half-round clay tile system except that the lower half of this system is a clay tile half-round instead of a concrete slab. The characteristics of the system are quite similar to those of the half-round clay tile system. In the past some clay tile system, both half-round and full-round, were constructed using loose fill insulation that completely filled the inside of the tile conduit. I do not believe this variation of the system is being constructed any more, probably because of problems resulting from the fact that the insulation could not dry out properly when no air space was provided. Systems similar to the full-round clay tile system have been constructed in the past, using concrete pipe sections. To my knoweldge such systems are no longer being built.

Figure 4 shows a concrete conduit. It is constructed in a quite different way than the concrete trench shown in Figure 1. With this system the concrete base is first poured, then the pipes and pipe supports are installed, and then the upper part of the concrete conduit is formed and poured. Metal lath is used as the interior form for the upper part of the conduit. The outside of the conduit is draped in some type of sheet material that serves as waterproofing. The sheet material is not bonded to the outside of the concrete conduit. The interior of the conduit is filled with a loose, mineral fiber insulation. Any moisture entering the conduit is expected to either drain out through the trough in the concrete base or to migrate through the walls of the concrete conduit and then condense on the sheet waterproofing on the outside and drain off into the ground. The system is probably as strong and as durable as other types of concrete trench. It is probably somewhat less expensive and also somewhat more resistant to water infiltration than other concrete trenches. Repairs to the system are, however, probably somewhat more difficult to make.

Figure 5 shows a prefabricated pressure-testable, drainable and dryable system. This general type of system is sold by several manufacturers, each of which has incorporated certain proprietary features in his product; however, the systems of all manufacturers of this type of system have certain features in common. The system consists of a steel outer casing (which may be either smooth or corrugated and either galvanized or ungalvanized), one or more carrier pipes insulated with some type of preformed pipe insulation, usually calcium silicate, and pipe supports of some type, usually made of a heat insulating material. Various materials are used to protect the outside of the steel casing from corrosion, including cold tar enamel, fiber glass reinforced epoxies, and fiber glass reinforced asphaltic compounds with a felt wrap. The system is prefabricated in the factory in 20 or 40 foot lengths which are welded together in the field. The completed system is intended to be pressure-tight and hence watertight. Ordinarily, watertightness is verified by applying air pressure to the interior of the casing after welding and before backfilling. If water does get into the casing through a carrier pipe leak or as a result of a hole in the outer casing, the casing can be drained and dried by removing drain and vent plugs in the ends of the conduit. The system is probably slightly less expensive than some of the other systems we have described previously, and it has very high resistence to water infiltration, and it is repairable in place. The disadvantages of the system are that its outer casing, being steel, is subject to corrosion, and the fact that leaks which may develop in the carrier pipe or the outer casing are sometimes difficult to locate.

Figure 6 shows a prefabricated sectionalized system. The system comprises a single carrier pipe surrounded by a layer of calcium silicate insulation plus a layer of urethane foam insulation. The outer casing is asbestos cement. The system is prefabricated in 13 foot sections. Each section is sealed on both ends so that any water which gains entry to the system cannot migrate to adjacent sections. The various sections are connected in the field, with joints made tight by means of O-ring seals and specially-designed gaskets. The system is designed to be highly resistant to water infiltration; however, should water get into one section of the system, the water will be confined to that section; hence, the most that would be lost as the result of a failure would be one 13 foot section of conduit. The system is probably competitive in price with the pressure-testable steel system. Its outer casing being asbestos cement is not subject to corrosion, and the system requires less field labor to install. However, the pressure-tightness of the conduit sections cannot be verified in the field.

Figure 7 shows a poured-in-place insulating envelope-type system. The system comprises nothing more than an envelope of powdered insulating material poured around carrier piping. Various types of powdered material have been used with this system over the years; currently, two materials are in fairly widespread use. One is a powdered hydrocarbon material, and the other is a chemically treated powdered chalk material. Both materials are highly resistant to water infiltration. Systems of this type are constructed by suspending carrier pipe in a trench, building a form around the pipe to establish the configuration of the insulating envelope, and then pouring insulating material around the pipe within the form. In some cases a plastic film is laid over the completed envelope. The system depends on the inherent water resistance of the insulating material to keep water out. If water should get into the material, it is assumed that the heat of the pipe will drive it out and/or the water penetration resistance of the material will confine damage to a relatively small section of the system. Such systems are probably significantly less expensive than other types of systems discussed thus far. The systems are also relatively easy to install and repair. Since the resistance of the material to water infiltration can break down if water is under pressure, such systems will not perform satisfactorily if the ground water level is of such height that an excessive head of water will be imposed.

Figure 8 shows an insulating concrete envelope system. The system comprises a concrete slab base which supports carrier piping surrounded by an envelope of insulating concrete. The envelope is wrapped in some type of sheet material for water proofing. Drain holes are formed in the concrete envelope to permit the excess water used in mixing the insulating concrete (and any water which subsequently gains entry to the envelope) to be drained off. Any water entering a drain hole discharges into a manhole. Various types of insulating concrete have been used with this type of system, but the most prevalent type has been a portland cement/vermiculite aggregate concrete; within the past few years a new type of insulating concrete employing a polystyrene bead aggregate has been developed; I do not know the extent to which this concrete has been used to date. The polystyrene bead concrete is highly water resistant, but the vermiculite aggregate concrete is not. Therefore, good waterproofing is essential to the satisfactory performance of systems in which the vermiculite concrete is used. The cost of the system is probably somewhere between steel conduit systems and poured-in-place insulating envelope systems. Whether or not this system gives good service over a period of years would appear to be in part dependent upon how effective the drain holes are in removing water.

Figure 9 shows a sealed insulation system. The system is available in a variety of configurations, but basically all systems of this type comprise a single carrier pipe enclosed in pipe insulation with a tight jacket of some type around the insulation. The most commonly used insulation in systems of this type is urethane foam; however, calcium silicate and foamed glass insulation is also used. The most popular type of outer jacket in such systems is glass fiber reinforced epoxy or polyester; however, thermo-plastic materials such as PVC and asphalt coated felt wraps are also sometimes used. Generally, such systems are factory fabricated. In one version of this system, the jacket around the insulation is bonded to the carrier pipe at both ends of each length of carrier pipe, so that each segment of the system is in effect a sealed unit. In most systems, however, the insulation and jacket are continuous for the whole run of the system. Systems of this general class are probably lower in cost than other types of system we have discussed. There is, however, a temperature limitation with those systems which employ plastic insulation and/or plastic jackets.

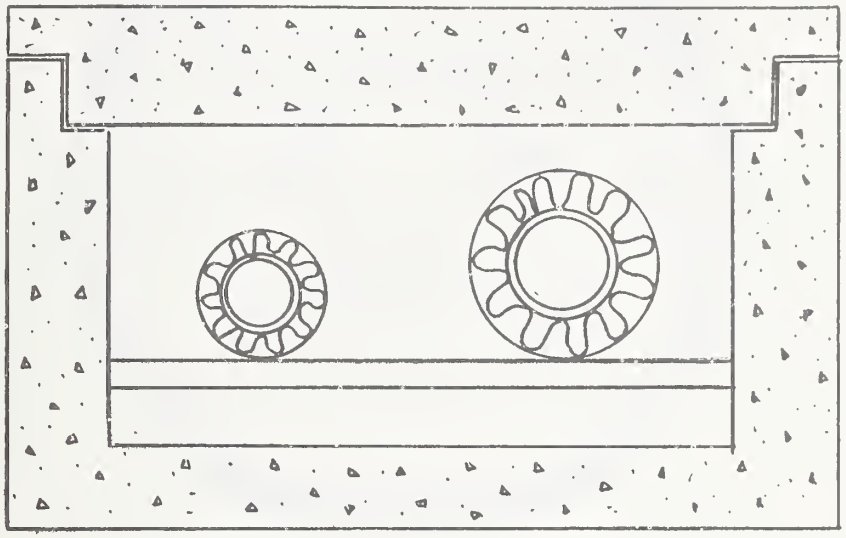

Figure 1 Concrete Trench System

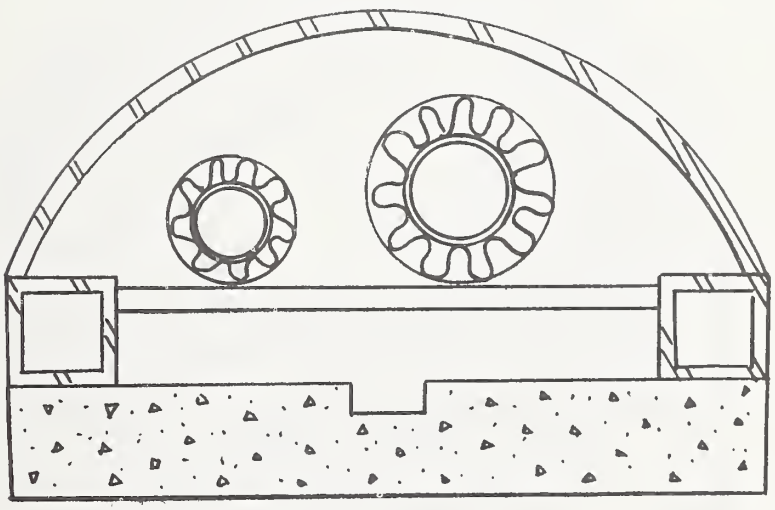

Figure 2 Half-round Clay Tile System

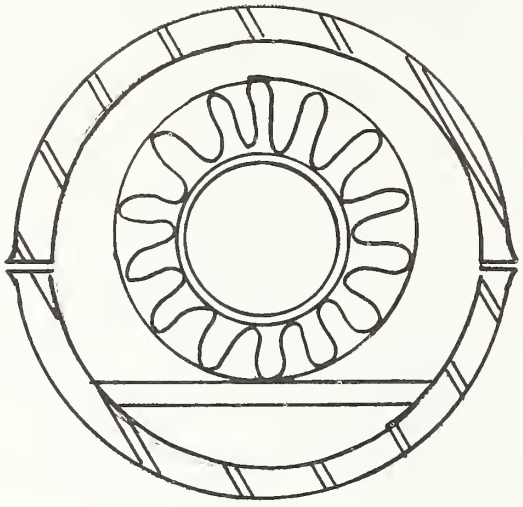

Figure 3 Full-round Clay Tile System

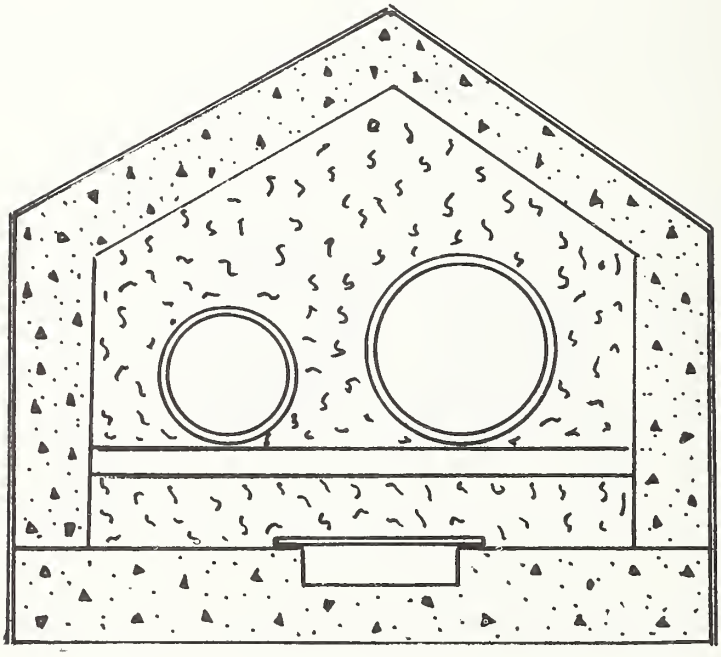

Figure 4 Concrete Conduit

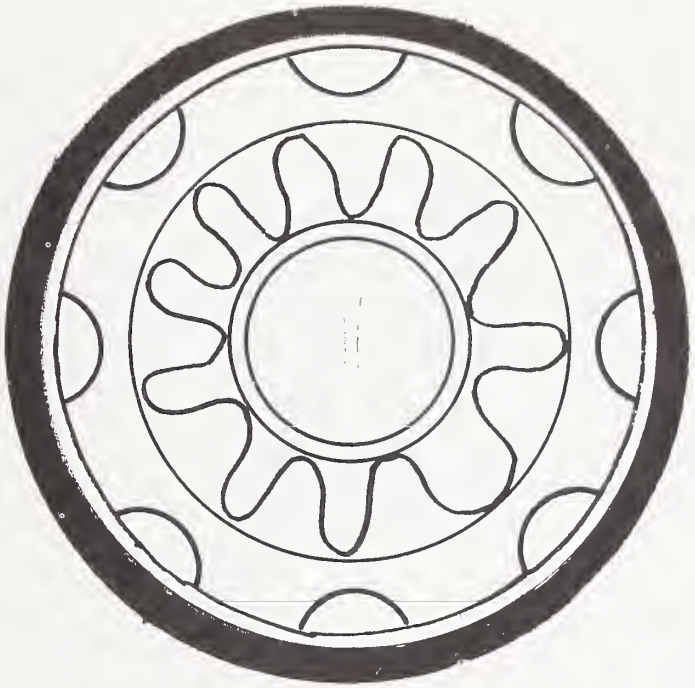

Figure 5 Prefabricated Pressure-testable System

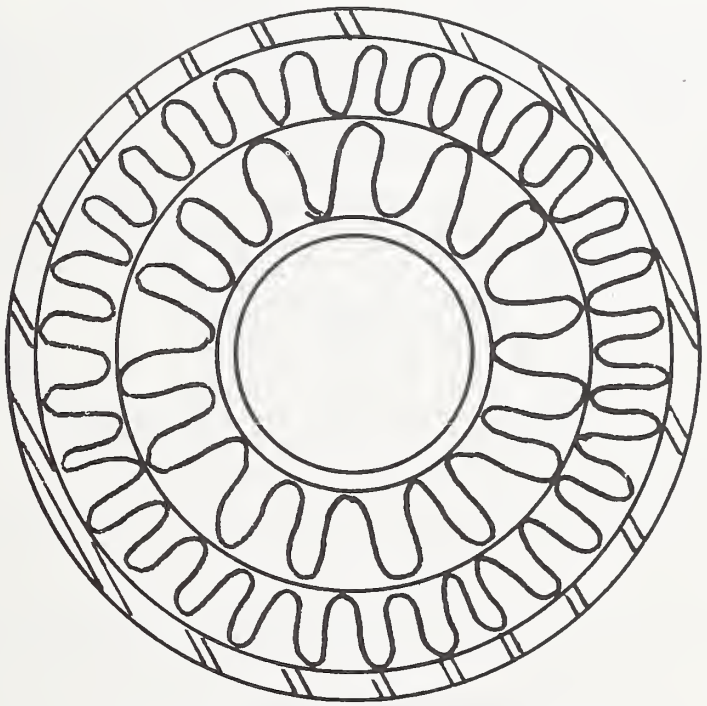

Figure 6 Prefabricated Sectionalized System

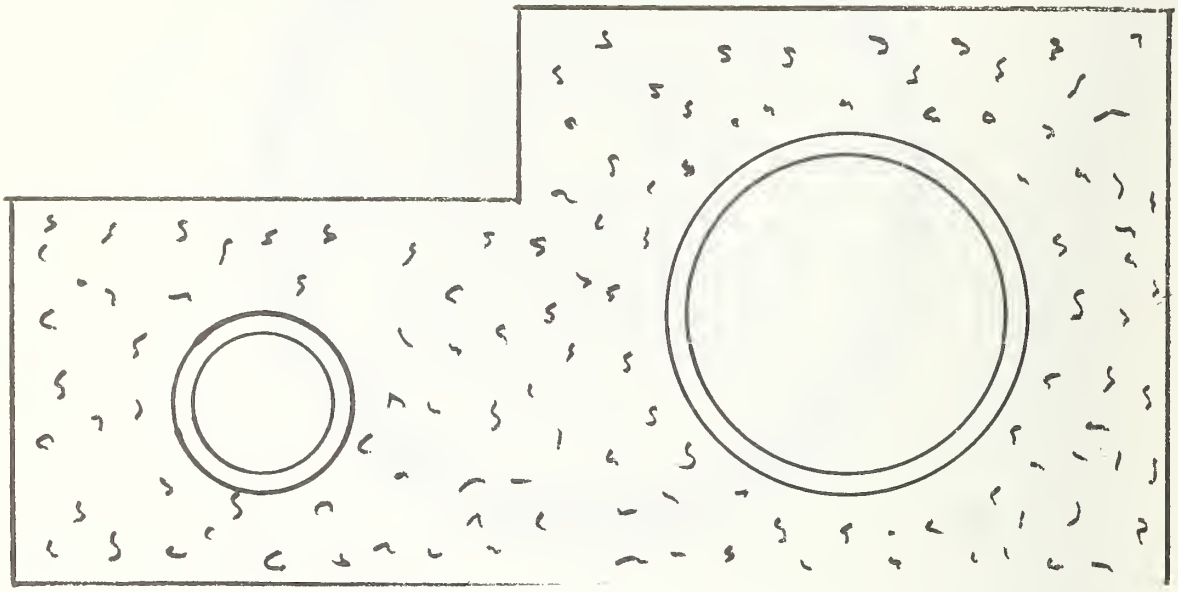

Figure 7 Insulating Envelope System

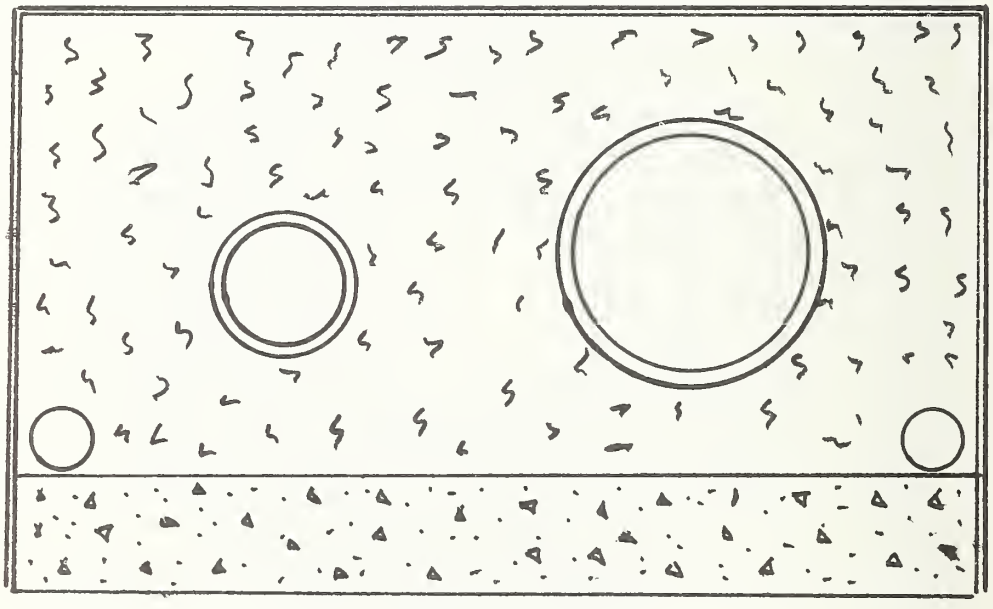

Figure 8 Insulating Concrete System

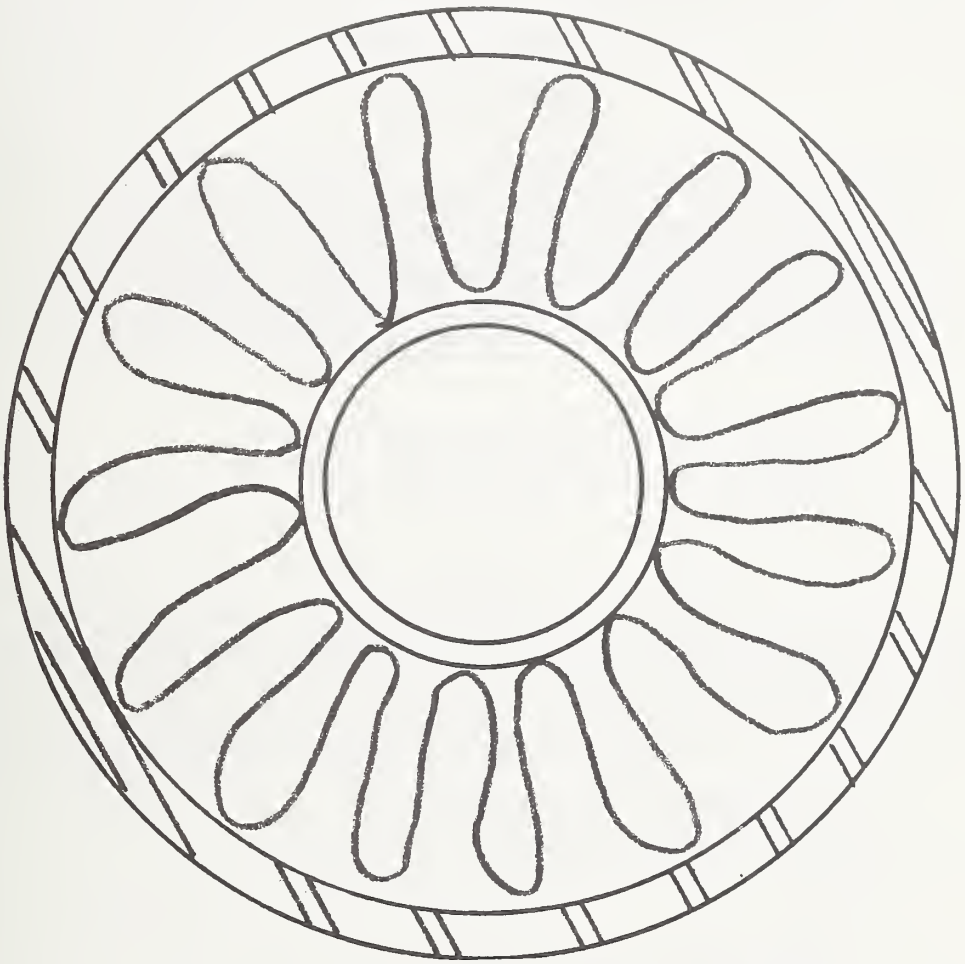

Figure 9 Sealed Insulation System

Design Criteria for Auxiliary Equipment for Underground Heating and Cooling Distribution Systems

Robert O. Couch

Ric-wiL, Inc.
Brecksville, Ohio

Manholes are an important and necessary part of any distribution system. They may be made of concrete or prefabricated steel. Design considerations must be given to sizing, accesses, ventilation, sumps, and miscellaneous equipment. Expansion provisions must also be provided for piping in distribution systems by using natural piping flexibility, expansion joints, ball joints, or gasketed couplings on the pipe.

Key words: Accesses, ball joints, concrete manholes, expansion joints, expansion loops, o-ring gaskets, prefabricated manholes, restrained piping.

1. Manholes

Manholes are a very necessary part of an underground distribution system. They should be included in the design of any system with the exception of short runs of piping between buildings.

Manholes provide the housing for many miscellaneous pieces of equipment necessary for the control of the system and its proper operation. Such equipment may be:

a. Control valves (both lines and branch)
b. Trapping points for steam systems
c. Venting and draining points for HTHW systems
d. Pressure reducing stations
e. Expansion devices
f. Anchors
g. By-pass piping or pipe looping
h. Condensate pumps, etc.

An advantage of manholes often overlooked is that they separate portions of the distribution system. Too often large systems have been designed with too few manholes. This is particularly true of high temperature hot water systems. If a problem develops in one area, it is most helpful if the area can be isolated for repair. In addition, manholes serve to segment the system and will prevent water which enters a damaged area from spreading.

2. Type of Manholes

Two types of manholes are available to the designing engineer:

a. Site built - usually of concrete
b. Prefabricated steel (fig. 1)

2.1. Concrete Manholes

Concrete manholes have the advantage that they can be built to any size in the field.

They must be designed with the proper combination of concrete and reinforcing bar for structural strength to withstand earth loads and soil conditions. Since watertightness is of prime importance in any manhole, the sides and bottoms should be monolithically poured and particular care given to exterior waterproofing.

A disadvantage of concrete manholes is that they are very difficult to build absolutely watertight.

Concrete manholes are usually built by contractors other than the mechanical contractor. Very close coordination is required between the two contractors and the end result is a divided responsibility for an important part of the system.

It should be noted, parenthetically, that it is ordinarily difficult to obtain a true cost comparison between concrete manholes and prefabricated steel manholes when the concrete work is not included in the mechanical contractor's section of the specification. Under these conditions, the mechanical contractor has no control over the estimate for the concrete work. To obtain a fair comparison it is necessary to include it as part of the mechanical contract.

2.2. Prefabricated Steel Manholes

The great advantage of prefabricated galvanized steel manholes is that they are watertight and can be air tested.

They arrive at the site completely piped with all specified equipment, insulated, ready for immediate installation. The contractor has only to connect the piping and conduit and pour a concrete anti-flotation pad at the bottom of the manhole.

Being supplied by the distribution system supplier they are designed as an integral part of the system. An advantage to the engineer/owner is that he has an opportunity to review drawings of the interior piping arrangements, equipment, etc., prior to its actual fabrication. Many times the cut-and-fit procedures in field-built manholes develop problems that present costly delays.

A disadvantage of the prefabricated galvanized steel manholes is that they are generally limited in size up to 10 ft. diameter due to shipping restrictions.

Corrosion resistant coatings are applied, internally and externally, to steel manholes for protection. In addition, if cathodic protection is used for the conduit system, the manhole is included in its design.

The use of prefabricated steel manholes limits the responsibility of the system to a single contractor in that he supplies both the piping system and the manholes from a single source.

Prefabricated steel manholes have been used extensively for the last 10 years with excellent results because they are watertight. They are significantly cooler than concrete thereby facilitating maintenance of internal equipment and conduit terminals.

3. Design Considerations

3.1. Size

Manholes should be sized not only to accommodate the equipment but sufficient space must be provided for the operation of valves and equipment and for necessary maintenance. A recommended minimum interior height is 7 feet.

3.2. Access

Manhole accesses should provide at least a 30" opening.

Accesses should be located over a clear floor area at the bottom of the manhole. This is an important safety consideration. They should not be directly over the piping or equipment. Thought should be given to the accessibility of valve handles and any equipment such as trap assemblies that must be maintained.

Care should be given in the design of the ladder used at the access. It should extend completely from the top of the access to the floor. The ladder should have side rails and non-skid rungs.

3.3. Ventilation

All manholes should be equipped with two 6" (minimum) vents installed on opposite sides of the manhole. One vent should extend 12" above the floor, the other to within 3" of the top to provide for gravity circulation of the hot air within the manholes. This ventilation keeps manholes cooler and acts as a possible trouble indicator by allowing any release of vapor from the manhole.

Vents should terminate at least 18" above grade and be equipped with mushroom caps or 180° return ells.

Vent piping from individual conduits within the manhole should be piped to the atmosphere. This eliminates filling the manhole with steam in case of trouble in the connecting conduit. These vents also act as an immediate tell-tale for a wet conduit system.

3.4. Conduit Entries

To maintain a watertight entry in prefabricated manholes, the conduit is welded directly to the manhole shell.

Conduit entries into concrete manholes can be accomplished by casting the conduit equipped with a welded circular leak plate directly in the wall. This design is satisfactory only if there is a pipe and conduit anchor within 5 ft. of the terminal end. This prevents excessive forces on the leak plates against the concrete wall.

A wall sleeve larger than the conduit and cast into the manhole wall is recommended when there is no anchor as above. The space between the conduit and the wall sleeve is caulked watertight. Compressible rubber links around the conduit have been used quite successfully for this sealing.

3.5. Sumps

All manholes should be equipped with sumps to collect any water that gets into the manhole.

It is preferable not to connect these sumps by drains to dry wells or sewers. Experience shows that many times the manhole is flooded instead of drained by back-up of water.

The preferred method of removing water from sumps is by pumps or using, where possible, a manually operated steam ejector. Experience has shown that automatic float operated ejectors may be a maintenance problem. The manually operating valves for the ejector should be located at the top of the manhole near the access opening.

If the sump is located under or near one of the manhole vents, a pumping hose from an above-grade pump can be easily inserted into the sump.

For protection of the manhole, piping equipment, and the distribution system, too much emphasis cannot be placed on keeping the manholes dry. Flooded manholes are the greatest contributing factor to the problems encountered in distribution systems.

3.6. Insulation

All piping within the manhole should be insulated to keep heat losses to a minimum and to reduce manhole temperatures.

It is important that the selected insulation be strong enough to withstand some stepping on it. Aluminum jacketing of insulation gives a neat appearance to the interior of the manhole but it does impede drying of the insulation if it becomes wet.

4. Miscellaneous Manhole Equipment

4.1. Piping

Piping within the manholes should conform to the specifications for the piping in the distribution system.

An exception to this would be the recommendation of using steel pipe within the manhole when using fiberglass reinforced plastic (FRP) pipe for condensate return lines. Using steel pipe simplifies the pipe fitting and provides a stronger, more positive connection between the trap discharge line and the return line. The FRP pipe is connected to the anchored steel pipe inside the manhole using flat-faced flanges.

A commonly used pipe for steam and high temperature hot water systems is A-53 Grade B Seamless. The schedule number or wall thickness is dependent upon pressure involved. For condensate piping Schedule 80 is recommended for its greater wall thickness as a resistance to corrosion failure.

Wherever possible, the piping should be welded keeping flanged and screwed connections to a minimum.

4.2. Valves

Valve selection is often based on the experience of the engineer.

Generally speaking, gate valves are used for the high temperature systems. Cast steel welding-type bodies with outside screw and yoke offer excellent reliability.

Butterfly valves mounted between flanges are generally used for lower temperature services. While the flanges do present a possibility of leakage, the space-saving in the manholes usually overcomes this objection.

4.3. Steam Traps

There are many different types of traps available today.

The most commonly used traps for the high pressure drip points in manholes are the inverted bucket trap or the thermo-dynamic trap. Selection of the trap is a matter of individual preference based on experience.

Proper sizing of the trap is necessary for satisfactory operation. When sizing the trap, the warm-up load as well as the heat loss load or radiation load of the pipe should be considered. All trap manufacturers offer guides for sizing.

Occasionally it is necessary to discharge condensate from the high pressure drip leg into a flooded return line. This can cause a water hammer problem from flashing steam discharging directly into the flooded line.

Installation of a capped perforated trap discharge inserted into the return main will reduce or eliminate this problem (fig. 2). It tends to pre-cool the flashing steam and prevents the formation of a large vapor bubble in the return line that when collapsed could cause water hammer.

5. Expansion Devices

Provision for compensation of expansion or contraction of piping must be provided within the system.

This may be accomplished by:

a. Natural flexibility of the pipe such as loops, elbows, or offsets.
b. Mechanical expansion joints
    (1.) Slip type
    (2.) Bellows type
c. Ball joints
d. O-ring gasketed joints or couplings

5.1. Natural Flexibility

Where space permits, the use of expansion loops or normal changes of direction to accommodate expansion is the preferable method. The great advantage of this method is that loops or elbows require no maintenance during the life of the system.

Expansion loops, offsets, and elbows must, however, be designed to prevent piping stresses greater than those allowed by the Code for Pressure Piping (ANSI B31.1.0). There are several methods of calculating these stresses. Simple charts (fig. 3) as well as complicated computer programs are available.

It is important that any stress calculation takes into consideration the restraints or guides in the underground system. The pipe is not "free-floating" as overhead systems are.

Many systems due to their routing have changes of direction that can provide flexibility of the piping without the addition of loops. These direction changes should be utilized by the judicious selection of the anchor points.

Any system utilizing changes of direction for expansion compensation must, of course, allow adequate chamber space for the pipe movement.

Cold springing of pipe, i.e. forced contraction of the pipe in the cold condition, will reduce stresses in the piping when it is in the hot condition. However, this must be done carefully. Also, no credit for reduction of stresses by cold springing is allowed by the Code for Pressure Piping.

5.2. Mechanical Expansion Joints

The advantage of the mechanical expansion joint is that straight lines of piping may be used in narrow access routes such as under streets, sidewalks, and between other utilities.

The main disadvantage is that expansion joints do require maintenance periodically or replacement.

These expansion devices should be located in manholes or buildings where they are accessible.

There are two basic types of expansion joints:

a. Slip type - This type consists of a machined cylinder that slides in a machined housing as the pipe expands or contracts. Various forms of packing material are used for sealing (fig. 4).

   Slip type expansion joints accommodate longitudinal movement of the pipe along its axis. Torsional motion is permissable - lateral movement is not.

   The standard amount of expansion accommodated by slip joints is 4", 8", or 12". Special joints are available.

   Maintenance of this type of joint consists mainly of repacking or adding packing. With many joints, this can be done while the line is in operation.

b. Bellows type - This type consists of convoluted bellows of corrosion resistant material that compress or flex as the pipe expands or contracts (fig. 5). These joints can be supplied with inner telescoping sleeves to minimize contact with the flowing fluid and the bellows.

   Many bellows are equipped with reinforcing rings that add additional hoop strength to the bellows and serve to equalize the expansion movement among all of the individual convolutions.

   Generally, bellows joints are designed to accommodate longitudinal movement of the pipe with a limited amount of lateral movement. However, special bellows joints can be hinged or gimballed. These require close cooperation with the manufacturer for their proper design and installation.

   The amount of expansion accommodation in a bellows joint is dependent upon its number of convolutions. Care must be exercised in the selection of the joint taking into consideration the pressure, temperature, and amount of movements involved.

For proper operation of all types of these expansion joints, the pipe must be carefully aligned during installation.

Proper guiding of the pipe into the joint is necessary. Each manufacturer will give the number of guides and the distance between them for satisfactory joint operation. This is particularly important for slip type joints to prevent binding of the cylinder in its housing.

Anchor forces using mechanical expansion joints are quite high since the force is a function of the pressure and the largest cross-sectional flow area. Spring rates as well as friction forces must be added to this. Sturdy anchors are a necessity.

5.3. Ball Joints

Ball or swivel joints have four basic parts, i.e. a polished spherical ball, a machined casing, sealing gaskets, and a retaining flange or nut (fig. 6).

Ball joints do not directly absorb axial motions but must be used with offsets to laterally accommodate the movement of the pipe. Since ball joints have a limited amount of angular flex, the amount of expansion that they can accommodate is dependent upon the distance between the ball centers. This is covered quite well in the design manuals of the various manufacturers.

When located in limited space areas such as manholes, the design must be reviewed to make certain that the deflection of the lines as they move from the cold to hot position does not overstress the piping. This can be corrected by the use of a third ball joint.

Generally, anchor forces when using ball joints are lower than when using slip or bellows type joints. Pipe guiding is also less critical in that the offset method with ball joints permits movement in two or more planes simultaneously. Ball joints may also be used to accommodate torsional forces.

Ball joints should be installed in accessible locations such as manholes or buildings.

5.4. O-Rings or Gasketed Joints

O-ring or rubber gasket joints in the piping have been used successfully to absorb contraction or expansion (fig. 7).

Most experience with this type of expansion accommodation has been in chilled water or low temperature hot water service. Each rubber gasketed joint is designed to accommodate the movement for each individual pipe length.

Careful installation and hydrostatic testing of the line prior to complete backfilling is necessary to insure a leak-proof system.

As with any pressure line utilizing rubber gasketed joints, thrust blocks must be installed at all changes of direction and at terminals. This is to prevent joint separation from hydraulic pressure when the line is in operation. Compacted backfill must not be considered a substitute for thrust blocks.

5.5. Restrained Piping

The restraining of metallic pipe from expansion has not been a normally accepted practice - particularly for high temperature lines.

However, many of the filament wound fiberglass reinforced plastic (FRP) pipes do permit this in underground installations. This is allowable since the unit stress developed due to change in temperature is less than the allowable compressive strength of the material. In simplified terms, the pipe is loaded as column with continual lateral support being supplied by the backfill.

Experience has shown that anchor blocks must be installed at all changes of direction. Metallic pipe connecting to FRP pipe at terminals must be anchored to prevent excessive stresses from the metal pipe being transferred to the FRP pipe.

Figure 1 Prefabricated Steel Manhole

Courtesy Ric-wiL, Inc.

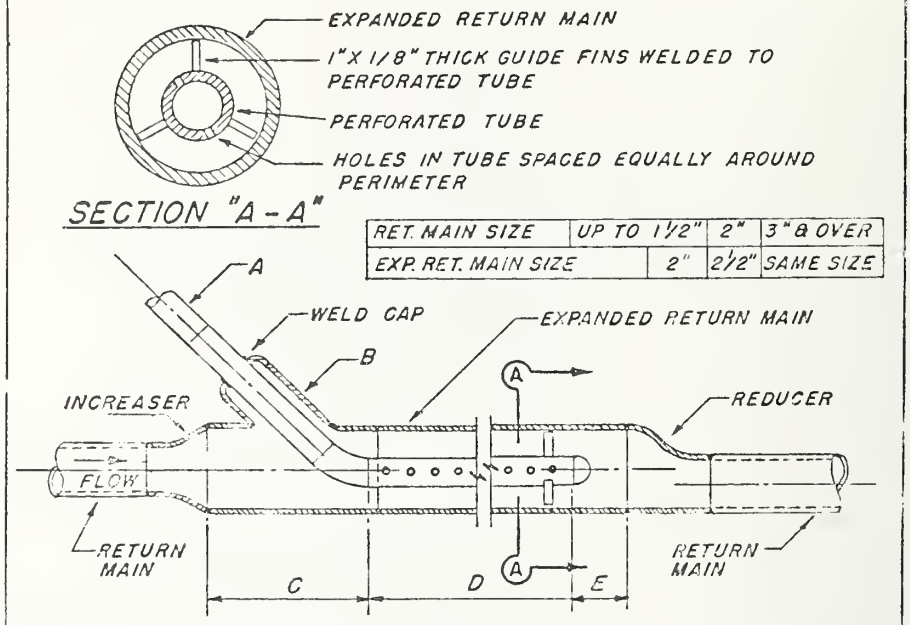

RET. MAIN SIZE	UP TO 1½"	2"	3" & OVER
EXP. RET. MAIN SIZE	2"	2½"	SAME SIZE

SECTION THRU EXPANDED RETURN MAIN

A	SIZE, TRAP DISCHARGE LINE	1/2"	3/4"
B	SIZE, 45 WELD NIPPLE	1"	1¼"
C	LENGTH OF EXPANDED MAIN AHEAD OF TRAP DISCHARGE PIPE	7"	7"
D	LENGTH OF PERFORATED PIPE	16½"	16½"
E	LENGTH OF EXPANDED MAIN FOLLOWING PERFORATED PIPE	2"	2"

ALL PIPE SHALL BE SCHEDULE 80

1/2" PERFORATED TUBE — 40 — 1/8" DIAMETER HOLES SPACED 1½" ON CENTERS IN 4 ROWS.

3/4" PERFORATED TUBE — 78 — 1/8" DIAMETER HOLES SPACED 1⅛" ON CENTERS IN 6 ROWS.

H.P. & M.P. TRAP DISCHARGE
INTO FLOODED RETURN MAIN

Figure 2 Trap Discharge Device

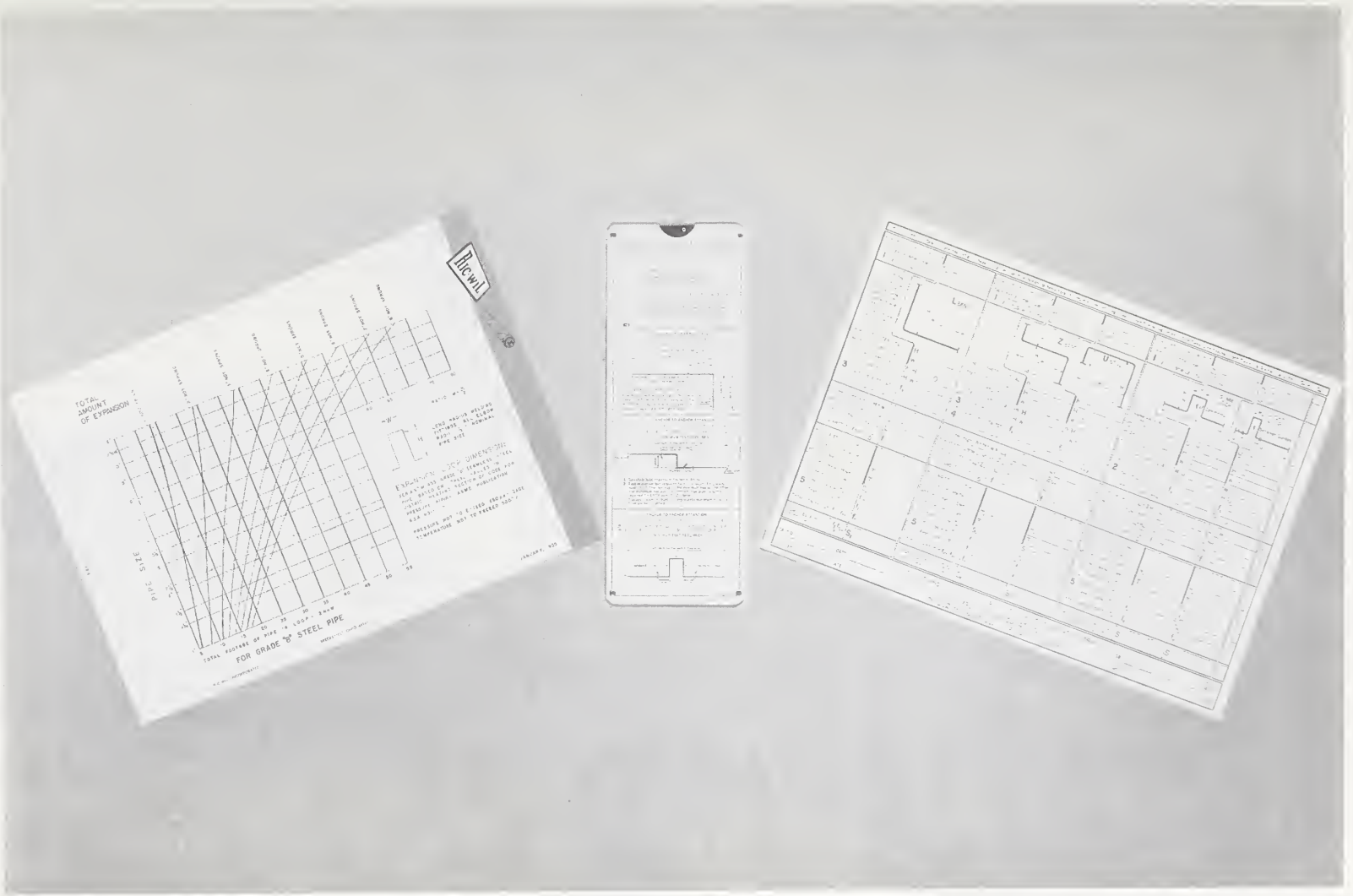

Figure 3 Pipe Flexibility Charts

Courtesy Ric-wiL, Inc.
Courtesy Tube Turns, Inc.

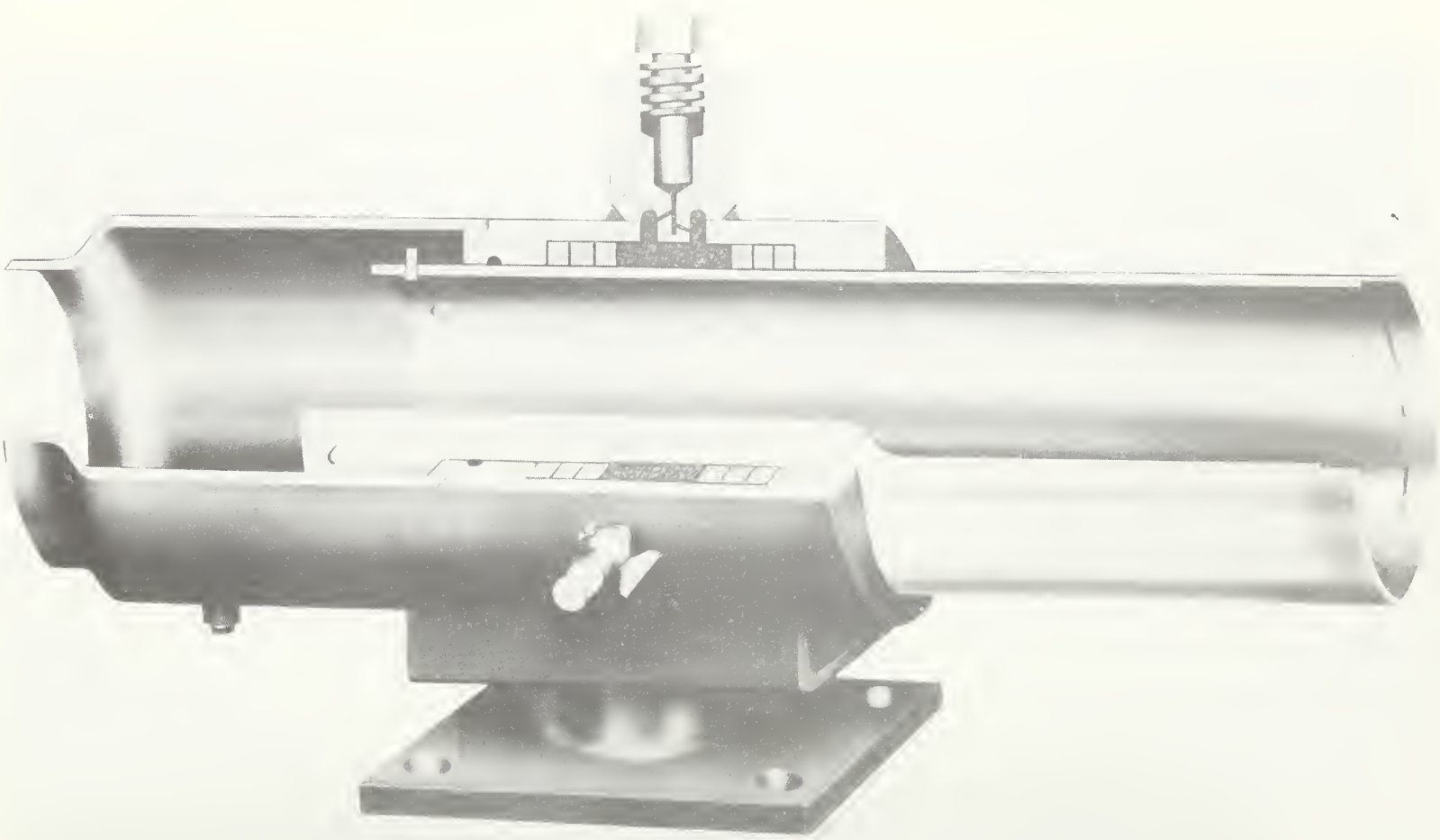

Figure 4 Slip Type Expansion Joint

Courtesy Advanced Thermal Systems

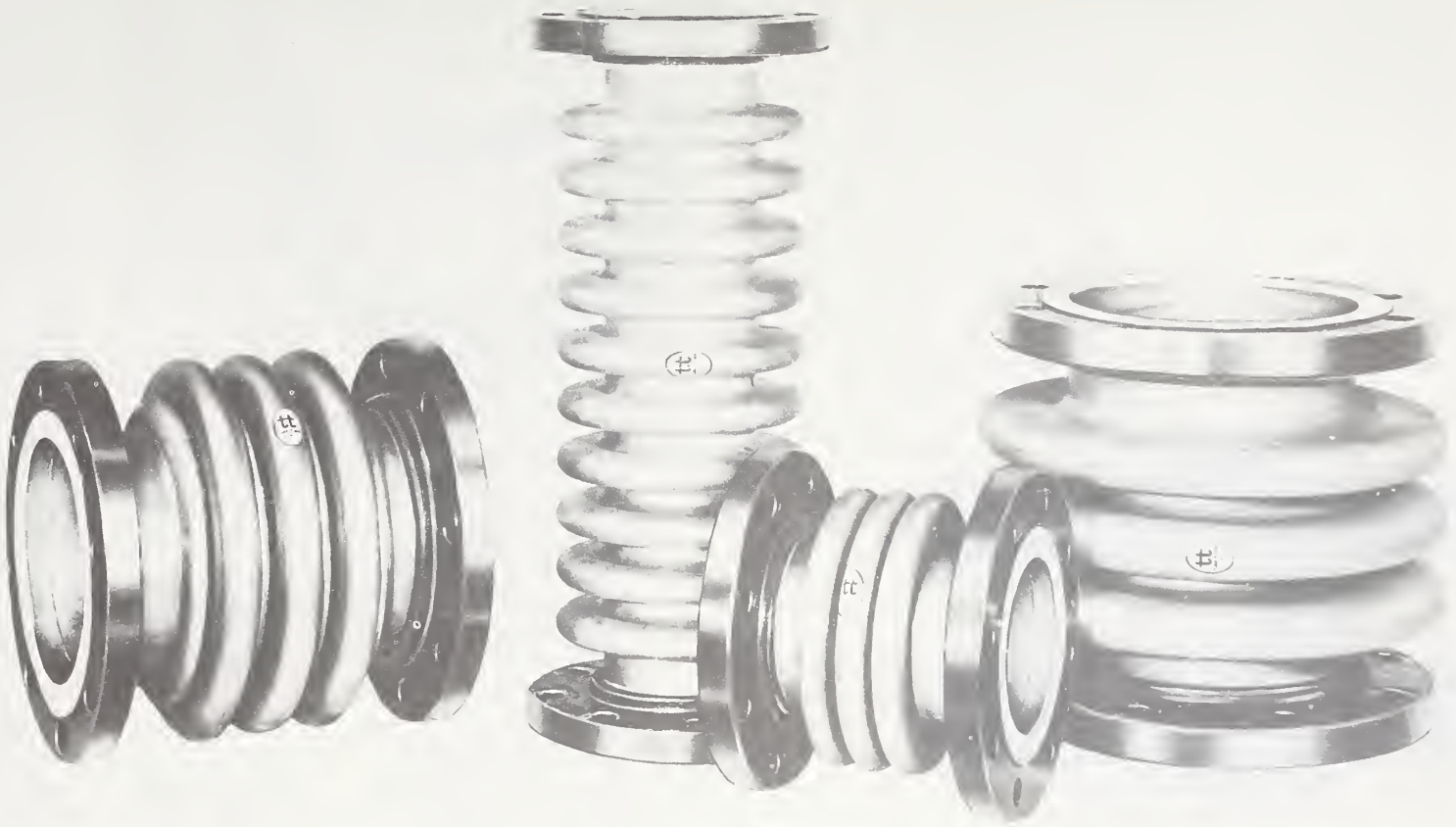

Figure 5 Bellow Type Expansion Joints

Courtesy Tube Turns, Inc.

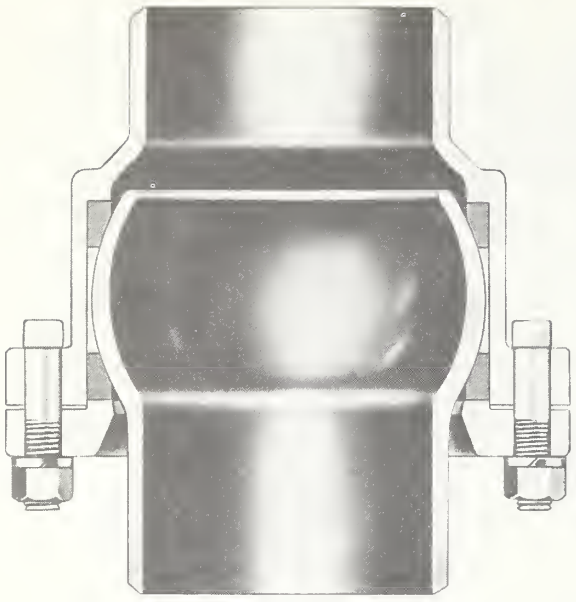

Figure 6 Ball Joint

Courtesy Aeroquip

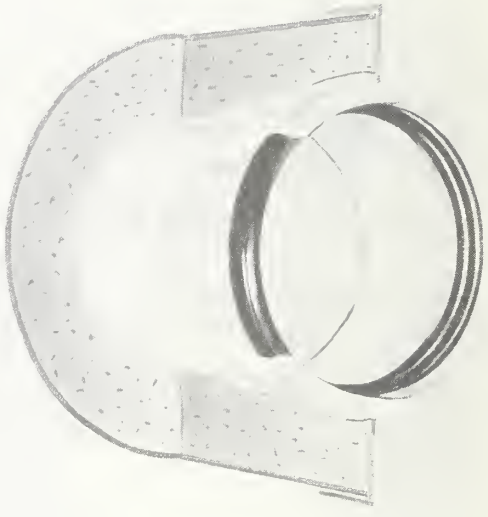

Figure 7 Rubber Gasketed Joint

Courtesy Ric-wiL, Inc.

Federal Agency Specification for Underground Heat Distribution Systems

Lee V. Irvin, Jr.

Department of the Navy
Naval Facilities Engineering Command
Alexandria, Virginia

Past and present efforts of the Federal Construction Council (FCC) Task Group on Underground Heat Distribution Systems are reviewed. It is pointed out that the present FCC criteria, properly implemented by Inter-Agency performance specifications, have been very successful in reducing the number of system failures. It is also noted that these criteria are too inflexible, and have resulted in the use of unnecessarily expensive systems in some areas and prevented the acceptance of promising new concepts. The FCC criteria are now being updated and are expected to be made available in early 1974. General provisions of the proposed criteria, activities in other areas such as ASTM, which will affect Agency Specifications, and plans for revising the present specifications are discussed.

Key Words: ASTM, criteria, Federal Consctruction Council, inter agency, pre-qualification, system performance, tri-service, underground heat distribution.

1. Introduction

Specifications for underground heat distribution systems have been a major and continuing concern to both producers and users for many years. It now appears that this concern is intensifying. This is not surprising, in the light of our present fuel supply problems, and the resultant need for conserving energy. We cannot afford the energy losses we accepted in the past; when the actual losses were seldom recorded, when in many cases the condensate was wasted, and when our major problem was simply to prevent catastrophic failures with their resultant inconvenience and costs.

In this paper, the history of the federal government's specifications for underground heat distribution systems is reviewed, the present efforts of the federal agencies and others to improve the criteria for these systems is discussed, and the author's comments on the effectiveness of these efforts are given.

2. Background

Immediately following World War II, the federal government engaged in a massive construction program utilizing the central plant concept, which in turn required many miles of underground heat distribution systems. A great many different types of systems appeared on the market, most of which were unsuitable for the application, and many of which are no longer manufactured. Federal agency specifications at that time were based mostly on experience and judgement, and tended to allow anything that appeared to be theoretically suitable. As a matter of interest, most of these specifications were design and material specifications which placed very little emphasis on performance testing.

By the early 1950's, with increasing numbers of systems being installed, the failure rates had become a matter of concern to the federal agencies. By 1957, due to the massive failures then occuring and the tremendous replacement costs, which by 1963 would exceed ten million dollars for one year, in the Department of Defense alone, it became clear that an extensive engineering investigation program to determine the causes of these failures and to develop criteria for the design and installation of more reliable systems was mandatory.

3. First FCC Criteria

Accordingly, a Federal Construction Council Task Group was formed in 1957 for that purpose. This Task Group conducted the first comprehensive study of underground heat distribution systems, and developed design and installation criteria which were published in FCC Technical Report 30 in 1958 [1].* Although the original report has been revised twice, and complimented by FCC Technical Report 39 [2]* on testing procedures for the evaluation of underground heat distribution systems, the original criteria have remained basically the same, and are used today by most federal construction agencies.

4. Tri-Service Specification

These criteria were being reflected in the specifications of various agencies by 1960, and in 1964 the first inter-agency specification based on the criteria was published by the Army, Navy, and Air Force [3]. This tri-service specification required pre-qualification performance testing, and approval of test reports and manufacturers'brochures prior to qualification for use by the three services.

The fact that these efforts have paid off in a big way, as far as stopping the failure trend is concerned, must be emphasized here. The author has not heard of the failure of a single system which was manufactured and installed in accordance with the tri-service specification. True, we still hear of a few failures, but the systems which failed did not conform to the tri-service specification. In fact, these few failures occured either because the specification was not enforced, or because its provisions were waivered in order to permit the use of new materials, such as plastic pipe and casings, which had not been pre-qualified by performance testing as required by the specification.

5. Need for Updating Criteria

However, in spite of the fact that proper implementation of the FCC criteria had solved the failure problem, it was becoming apparent by 1968 that the criteria might be too inflexible. That it was, in fact, resulting in the use of unnecessarily expensive systems in some areas and preventing the use of promising new concepts in others.

Accordingly, in 1969, a new task group was formed to update the FCC criteria to provide greater flexibility, and to permit the use of state-of-the-art concepts. Needless to say, this task group had a very difficult assignment. In view of the mass failures which had occurred before the criteria were implemented, and the fact that its implementation had indeed successfully stopped those failures, the group was, naturally, very reluctant to rock the boat.

However, the following facts had to be faced:

(a) Only one system design had qualified.

(b) Only three manufacturers had qualified to provide this design.

(c) The design which qualified was expensive, undoubtedly overdesigned for many sites and applications, and still was not the most corrosion-resistant design available.

The effect of this, of course, had been to increase first cost both by virtue of the manufacturing cost and by limiting competition. And the irony of it all was that there seemed to be no incentive for a manufacturer to qualify an inherently non-corrosive system.

A detailed analysis of how this situation developed, when the criteria were intended to be performance oriented, and expected to result in the qualification of many systems, is somewhat elusive and beyond the scope of this paper. However, it now seems evident that the criteria itself was very design limiting, and that economics further narrowed the design options to the point where only one design was practicable. In some cases, non-corrosive systems which could have qualified were more expensive than the systems which had already qualified, and in others design changes to enable systems to meet the criteria would price them off the market. In any case, it was concluded that insufficient design latitude and economic incentives had resulted in the qualification of only one design.

The task group next attempted to evaluate the differences in site requirements, and the effectiveness of various system design concepts in meeting those requirements. This evaluation indicated the following:

(a) Only two site classifications -- water or no water -- do not give a sufficiently accurate description of the actual environmental conditions a system must withstand, and may lead to requirements for overdesign in some cases and underdesign in others.

(b) Several more economical systems are available, and with proper quality control, can be

* Figures in parentheses indicate the literature references at the end of this paper

used with assurance of reliability under some site conditions.

(c) More expensive systems which are inherently non-corrosive are available, and can be used with assurance of reliability if proper incentives are offered, and quality control procedures developed.

(d) Several new systems, based on design concepts and state-of-the-art improvements not covered by the criteria have been developed in the ten years since the criteria was last updated. Some of these systems have been proven reliable and offer definite advantages.

6. Proposed Criteria

With the above in mind, the task group proceeded to update and expand the criteria. This work has been essentially completed. However, the report has not yet been finalized or approved; so its contents cannot be discussed in detail. However, some remarks regarding the general provisions which are proposed and which are expected to be implemented by most federal construction agencies within the next few months are in order.

(a) The proposed criteria are more systems oriented than the present criteria, and will, therefore, place more responsibility on the system manufacturer. For example, the manufacturer will be required to provide a complete system including manholes, or specifications for manholes. Prior to qualification of his system for use by federal agencies, he will submit a pre-qualification testing program, and detailed specifications including quality control and installation and test requirements for agency approval. After qualification, he will provide a detailed design, heat loss calculations, and installation supervision for each project on which his system is installed.

(b) The criteria contain a much more detailed and definite method of determining site conditions than that required by the present criteria. Also, in order to ensure system compatability with site conditions without resorting to overdesign, the criteria proposes and defines four site classifications in lieu of the two presently used.

(c) Four sets of system performance requirements which are compatible with the four site classifications have been established. These are based on the required resistance to water penetration, water damage and corrosion. And, while some of these requirements may still be considered design limiting, most permit wide design latitude. For instance, the present criteria requires all systems to be drainable and dryable, while the proposed criteria permits options such as systems which are sectionalized or which inherently limit the spread of water to be used under most site conditions.

(d) The proposed criteria permits systems to be qualified in accordance with the intended operating temperature. This means, of course, that a system no longer has to qualify for 400 degree use when its intended use is at 200 degrees.

(e) The use of direct buried corrosion-resistant condensate lines will be permitted and, in fact, encouraged. However, pre-qualification as an essential part of a manufacturers' system will be required.

(f) Insulation requirements will no longer be specified in terms of insulation thickness applicable to all projects. Instead, these requirements will be calculated individually for each project and will be specified in terms of maximum permissable heat loss per lineal foot. The procedure to be used was developed by Dr. Kusuda of the National Bureau of Standards, under a project funded by various federal agencies. This method of calculation and specifying heat loss has many advantages. The calculations are far more accurate than those previously used, and they include all significant thermal properties of the particular system and of the underground environment of the particular site. Thus, the specifier will be able to determine both the economics and the exact energy losses involved and make any trade offs the situation warrants. The manufacturer will be required to submit calculations to verify that his system, using the thickness of insulation he proposes to provide for the particular job, will not exceed the heat loss specified.

7. Other Areas of Activity

Two other areas of activity, which will have a significant effect on federal agency specifications for underground heat distribution systems, should be noted.

The first is the Federal Construction Council program for developing federal construction guide specifications. This program was started in 1970, and its purpose is to promote the development of coordinated uniform guide specifications for use by all agencies. Although these specifications are not mandatory and may be modified by a using agency, it is expected that many of them will be used essentially as written by most agencies. Over thirty of these specifications have been published, and many more are in various stages of preparation and coordination. This is mentioned because it is expected that the specification which implements the new criteria being discussed in this paper will be a federal construction guide specification.

The other area of activity, and one which is of tremendous interest to both the federal agencies and the private sector is in Committee C-16 of the American Society for Testing and Materials. C-16 is the ASTM technical committee which develops standards for thermal and cryogenic insulation. A new Sub-Committee, C-16.40, has recently been organized and charged with the responsibility of developing standards, which include specifications and test methods, for thermal insulating systems. One of the first tasks, and one on which work has already started, is the development of standards for underground heat distribution systems. Interest in the work of Sub-Committee C-16.40 is evident from the fact that 48 people attended the first meeting which was held on 8 October in Columbus, Ohio, and that several people have since applied for ASTM membership in order to fully participate in its activities, and especially in the development of standards for underground heat distribution systems.

The Government has been moving for some time in the direction of more utilization of voluntary concensus standards, and especially those developed by ASTM. It is, therefore, reasonable to expect that both manufacturers and users, including the federal construction agencies, will welcome ASTM standards which will provide both quality control specifications and uniform test methods taylored to the design and materials involved in each system. These standards should ensure that the performance criteria required for each site classification will be met under operating conditions.

8. Revision of Specifications

The federal construction guide specification which implements the criteria will not contain technical requirements. Rather, it will be a contract document which requires the installation of a pre-qualified system conforming to prior approved manufacturer's specifications, installation instructions, test procedures, etc. It will also require design and heat loss calculation submittals, and installation supervision by the manufacturer.

Pre-qualification instructions based on the proposed criteria will be prepared by an interagency committee, and sent to all manufacturers. In general, these instructions will define the site classifications, outline the system requirements for each site classification, and request each manufacturer to submit system design details, detailed specifications, installation instructions, test procedures, etc. applicable to his system, along with the pre-qualification test methods he proposes to use to verify that his system complies with the criteria for the site classification for which he desires approval.

The committee will accept or reject each submittal with appropriate comments. When satisfied with a manufacturer's preliminary submittals, the committee will request him to have the tests performed by an independent test laboratory, and to submit the results along with final copies of the specifications, etc. for approval. The manufacturer of each approved system will then be notified that approval is based on expected satisfactory performance of the system and compliance with contract requirements, and will be withdrawn if system performance is unsatisfactory or contract requirements are violated.

Work on the specification and the pre-qualification instructions will commence shortly after the first of the year, and should proceed rapidly.

The target date for implementing the federal construction guide specification will be sometime next summer or fall. It will depend on how fast a sufficient number of systems can be qualified, and this in turn will depend primarily on each manufacturer's willingness and ability to propose decisive test methods and prepared tight specifications that provide quality control for his system. The submittal of less than decisive test methods and loose specifications will definitely delay approval.

It might be added here that, as ASTM standards are expected to eventually form the common bond of agreement between the manufacturer and the user in both government and private sectors, it would appear to be in each manufacturer's best interest to pursue the federal construction guide specification and the ASTM route simultaneously.

9. Summary

The benefits which the proposed specification is expected to provide, and the effect that these benefits will have on both the economics and the efficiency of underground heat distribution systems are as follows:

(a) An accurate determination of actual site conditions.

(b) System design and performance consistant with actual site conditions.

(c) Increased use of more economic and reliable condensate returns.

(d) Accurate permissable heat loss determinations.

Therefore, it seems reasonable to expect increased competition, reduced first costs and life cycle costs, and lower heat losses.

If this is accomplished, one of the major objections to the central plant concept will be overcome, and a significant increase in the efficiency of energy utilization will be possible.

10. References

[1] "Underground Heat Distribution System", FCC Technical Report No. 30R-64, National Academy of Science, National Research Council Publication 1186, Washington, D. C. 1964.

[2] "Evaluation of Components for Underground Heat Distribution System", FCC Technical Report No. 39-64, National Academy of Science, National Research Council Publication 1196, Washington, D. C. 1964.

[3] "Tri-Service Specification dated 1 September 1964" and "Procedure for Establishing Acceptability of Underground Heat Distribution Conduit Systems, dated 1 July 1964".

Specifications for an Underground Heated & Chilled Water System for Private Sector Contracts

George S. Campbell

Geo. S. Campbell & Associates, Inc.
Chattanooga, Tennessee 37403

Based on 30 years experience in Consulting Engineering, an over-view is given of the technical specifications required (1) to show the designers' intent, (2) to set out clearly the material and equipment required under the proposed contract, and (3) to establish the construction methods which will be required for certain operations. The necessary capabilities of a specification writer are suggested. The true scope of a complete specification is outlined and a workable format is given. The impossibility of following the "3 names and catalogue numbers" approach is shown. A comment as to the practicality of the performance specification is given. Certain design considerations underlying an underground heated and chilled water system are enumerated. The need for accurate site utility information is emphasized. The need for accurate delineation of contract limits in the Contract Documents is shown. The typical equipment in the Central Energy Plant serving an underground system is enumerated. The various types of piping materials and their applications are discussed. Particular attention is given: cascade heaters, pumps, and insulated underground piping. The problems of protecting insulation are explored. Several thoughts on unexpected design and installation problems are given. The need for Limitation of Designer Liability is explained. Finally, a method is suggested to obtain maximum competition at minimum contract cost.

Key Words: Cascade heater, insulated underground piping, insulation, limitation of liability, "or equal" specifications, performance specifications, schematic diagrams, specifications, specification writer.

1. Summary

This paper (1) will define the terms "specification writer" and "specification", (2) will briefly discuss the various types of packaged specifications presently available, (3) will cover a suggested specification format, (4) will expose a personal phobia concerning certain government requirements, (5) will discuss various pieces of material or equipment which make up an underground heating and chilled water system, and finally (6) will cover a few design ideas which may be of interest.

Having started in 1934 as a cub Engineer with the old Tennessee Electric Power Company, which incidentally was bought out by T.V.A., and then having started in business as a Consulting Engineer in my own name in 1940, let me assure you that in the late '30s, reasonably complex jobs were installed with complete satisfaction, with a minimum of controversy, and within a satisfactory time span based on contract documents that in today's world would be considered a rough draft of outline specifications and conceptual rough sketches. In those "good old days", everyone---Owner, Architect, Engineer, Contractors, and Mechanics, was interested in "making it work". There was a pride of craftsmanship and a willingness to cooperate which is sometimes absent in today's world. Perhaps the '30s can be characterized as the frontier of air conditioning in America when every day was a new exoerience; whereas the '70s represent a stable community with each person's interest protected with a minimum of give-and-take .

2. Definition of "Specification Writer"

What are the qualifications of the so-called "specification writer"? Many think of him only as a high-class clerk. As the head of a 17-man consulting office, which includes 6 other Registered Engineers, my main engineering function is writing all specifications. This requires understanding the project design and the reasons for equipment and material selection. In this context, the "specification writer" becomes a senior professional engineer with authority to coordinate the entire project, to suggest materials and type of equipment to be used, and to evaluate various options.

3. Definition of "Specifications"

Next, to define "specifications". While our office issues separate, bound specifications, invaribly the specifications refer to drawing schedules and details, so information on drawings becomes part of "specifications". This is desirable. Rarely does the mechanic, and even sometimes the superintendent, in the field see the bound set of specifications; however, he works daily with drawings. If pertinent equipment information is on the drawings, the man on the job benefits.

Also, we use standardized schedules and installation details. These have been developed within our office, and are not "off-the-shelf", "buy 'em by the dozen" items developed by someone else. They are constantly being changed as experience indicates a need for more details, for a revision, or to include new equipment and methods. This seems the clearest way to establish the performance and installation required.

Just as specifications and drawings explain the designer's intent, so do schematic diagrams. In my opinion, one-line, schematic flow diagrams have no equal in showing the relationship of each valve, pipe, and piece of equipment. These diagrams give the designer an over-view of the total design, give the spec writer a chance to understand the intended function of equipment, and give the contractor a concept of the design intent - information almost impossible to convey by plans and elevations alone. I suggest, therefore, that schematic diagrams be considered as part of specifications and be included on each job.

4. Specification Format

Now for the actual specification format. When C.S.I. came out with the original 4-digit system, we objected violently since it gave only 99 pigeon holes for all mechanical equipment---an impossible situation---also the sequence of items was poor. The 1972 edition carries the approval of most of the construction industry, uses five-digit numbering and has a reasonably logical sequence of items. In addition, it provides sufficient unassigned numbers for inclusion of specialized equipment. Accordingly, we follow this latest C.S.I. "Uniform Construction Index" format.

For the sub-division which they term "Narrow-Scope Section", we use the so-called three-part section. Within each "Narrow-Scope Section", the first part covers "General" items, the second part covers "Products" - and this covers most of the "meaty" specifications - and the third part covers "Execution" which gives an opportunity to cover installation requirements.

We are well aware that there are many competing specification formats. At least once a month, by magazine ad, by direct mail, and even once by long distance phone, we are asked to buy "The Super System". In short, the subject of specifications daily becomes more vital, more legalistic, and stays under constant review by most technical societies, trade groups, etc. in the construction industry.

5. My Pet Phobia

My pet phobia concerns government attempts to assure competition.

Their real love is the nonproprietory performance specification. It is voluminous. If you take any particular piece of equipment, you will find that every type of design, method, type, etc. known to the industry has been included. It is a specification thru which you can drive a 20-mule team. A really good performance specification will never be written because it will be too long, and by the time it is compiled will be out-of-date.

Pushed hard, the agency will permit use of manufacturers' names and catalogue numbers, but require at least 2 and generally 3.

I'll wager that no engineering office can at any particular moment accurately give even 2 manufacturers' names and accurate catalog numbers, including correct prefixes and suffixes, for every piece of equipment required on a project of any size. This is due to the sheer volume of catalog material required, the constant change, and the problem of filing. Furthermore, even during design, when specifications and schedules are being prepared, manufacturers' data change.

My strong preference is for one catalogue name and number. How, you say, can this be up-to-date? The answer is that I do not care. Even using last year's catalogue, a piece of equipment is accurately defined and Contractors can find out exactly what is needed.

6. Utility Site Information

It may not be purely a specification item, but I have yet to be given an accurate and complete Utility Site Plan of a proposed project - one which shows all utilities with sufficient details, which shows inverts of existing piping, which shows easements of various utilities, etc. Incorrect or incomplete information supplied the Consulting Engineer creates real problems during construction. Invariably, an unsuspected sewer will be uncovered precisely where a new line was to run; or after construction is underway in a supposedly clear area a Utility easement will be discovered. I can only say that here a "Philadelphia lawyer" type of catch-all shelter clause is needed to protect hapless Consulting Engineers.

7. Contract Limits

Similar troubles arise if several independent contracts are to be constructed on one piece of real estate. A completely new project may involve: (1) a central energy plant, (2) an underground heating-chilled water system, (3) the primary, electric distribution system, and (4) several buildings - all with separate contractors, and under construction at the same time. Here the spec writer needs to coordinate contract limits and get Owner agreement prior to contract award.

The contract documents need to show: (1) precise rights-of-ways, (2) utilities which will be encountered, where, and at what elevation, (3) precise limits of the contract over which the contractor will have control, (4) necessary easements which are there, (5) necessary coordination with others, and (6) who pays for required actions.

8. Starting Point for Specification

The starting point of any specification is to decide the required function. From this is derived capacity in terms of size and performance. Then, depending upon the ambient conditions and exposure to corrosive or deteriorating elements, the quality of material is determined.

When function and performance are known, the spec writer and the designer team-up to decide the product needed. Then the spec writer starts with the manufacturer's literature. In tribute to many of the better manufacturers, most have suggested specifications which are reasonably good.

Stop! Have care! Some data are poor, some plain deceitful, and all of it must be carefully and sceptically appraised. Try to retain the function and material requirements while eliminating proprietary phrases, etc. which are hidden in the manufacturer's specifications. Compare different manufacturer's specifications. Many times such an evaluation points up a feature that is an optional extra with one, a standard item with another, and not even furnished by the third. You then must decide whether or not the feature is needed, knowing that while eliminating a manufacturer, you have gotten the performance needed.

Having compared and checked; relax and cogitate for a few minutes. Yes, actually think about the function needed and try to visualize the actual installation. A good spec writer is not an ivory tower hermit; he is a get out and get dirty, pragmatic professional.

9. Typical System Serving Underground Piping

In a typical system, high pressure steam drives turbine-driven centrifugal compressors;from this the exhaust steam goes thru absorption chillers to condense the steam and also develop chilled water. Also, high pressure steam, thru a cascade water heater, produces high temperature hot water for campus distribution. Other systems use electrically-driven centrifugal compressors to generate chilled water, and boilers directly develop high temperature hot water, or steam, for distribution to heating.

Technical analyses indicate that, even in the TVA area where electrical rates are supposed to be a minimum, fossil fuel fired boilers developing steam to drive turbine-driven centrifugal compressors and then tail into absorption units, work out to be the most economical method of producing chilled water. It is our opinion that this statement will hold true until nuclear, or solar, power becomes a factor in our energy equations. You must realize that even in the TVA area - any by the way the law establishing T.V.A. stated its purpose as: flood control, navigation, and INCIDENTAL power - the T.V.A. now generates approximately 80% of its power from fossil fuels, basically coal, the rest from hydro with a small portion of nuclear now about to go "on stream". Fossil fuels will be the basic fuel source for the next 10 or 15 years and perhaps much longer. Therefore, using these fuels directly in boilers is more economical than thru the secondary step of electrical energy. Another interesting point: the State of Tennessee, in the middle of the T.V.A. area, and also the Southern Appalachian coal fields, will more than likely require future State-owned heating plants to be coal-fired.

10. Cascade Heater

The component equipment within the central plant supplying an underground heating-chilled water system, consists of units familiar to all of us with the possible exception of the steam-high temperature hot water cascade heater.

There are several types of these, some vertical and some horizontal, in basic design. Some have spray nozzles to produce intimate mixing of steam and water, others use trays for mixing. Since the design of this particular piece of equipment is not standardized, the heat exchanger deserves careful investigation,evaluation and specification. If you use a tray type, investigate rather thoroughly the number of trays and their area; some models offer a very minimum tray area. If you use a spray type, check its operation under minimum loading.

It is called upon to heat the water within about 2° of saturation temperature regardless of load; it acts as a secondary deaerator and as such needs a continuous vent arrangement; the methods for both water inlet and distribution as well as water outlet anti-vortex devices need to be detailed. It has many more than the usual number of gauge glasses, connections for level controllers, etc. The cascade heat exchanger deserves an accurate drawing detail.

11. Pumps

A few observations with regard to pumps. High temperature, hot water service requires that bearings be cooled and seals selected to withstand the temperatures. Since primary chilled water will be circulated throughout the various buildings served, the pump head is a function of the highest point of the tallest building, rather than the first floor or basement level. Also, the method of connecting different buildings to the system must be carefully controlled since this reflects directly on the pumping equipment.

Be sure the Owner understands and agrees with your suggested piping method for connecting loads to the underground system. Realize that the chilled water temperature rise within a building and/or the hot water temperature drop, must be designed into the building equipment to obtain acceptable return water temperatures into the system. Otherwise, you may have one building taking four times the amount of water needed, but at only 1/4 the predicted temperature rise. These "water-hogs" will upset the best heat balance of a central system. They are not particularly hard to control unless some building designer is wedded to the idea that only a 3-way diverting, or mixing, valve can control a cooling coil. With a 3-way valve, constant volume design on the buildings, forget about campus load diversity, or minimizing pumping and other operating costs.

Consider the problems which might arise when a major line breaks. Of course, this never happens, but it might be worth half an hour over a coffee-break with your designer. Do this with a schematic piping layout. Imagine what may happen if suddenly flows reverse, pressures invert, and everything scrambles. You may find that a fast-operating valve to maintain pressure in the cascade water heater, or to maintain water flow in your central station thru an operating centrifugal chiller, or to hold the underground system full if the break is in the plant, may be a good investment.

12. Pipe, Fittings, Insulation

Obviously, the best has been saved for the last, namely: pipes, underground conduit, insulation, and accessories. First, it must be noted that an underground system must respond to practically every type of service: potable water, chilled water, high temperature hot water, high pressure steam, steam condensate, chemical feed lines, sump pump discharge lines, control piping, storm drainage, gas piping, fuel oil piping, compressed air, etc. as it encounters various utility lines. It is amazing how many buried services will be found - surprise, surprise. Because most of these services are familiar to Engineers, except perhaps for underground heating and chilled water systems, let us consider underground heating and chilled water piping needs.

In addition to all normal piping problems, the primary gremlin is corrosion from ground water and ground water chemicals. The second is protection of the insulation from ground water. A third consideration is insulation to prevent BTU loss.

The basic materials which might be considered are: pressure cast iron, ductile cast iron, black steel, galvanized steel, plastic-coated steel, stainless steel, asbestos-cement, plastic, and even wood casing if you believe some literature.

Dealing with the chilled water piping first, because it sometimes is less complicated, the primary decision is whether or not it should be insulated. Since our organization is computer oriented, and by-the-way highly recommends membership in APEC, we use a computer program developed by the National Bureau of Standards to calculate the insulation requirements for the particular configuration of chilled water piping, hot water piping, depth of bury, earth temperature, soil type, etc. expected on a project. Often the chilled water pipe can be left uninsulated. In this case, cast iron, pressure pipe as used by water utilities is a logical choice and AWWA methods, specifications, etc. are applicable. If, instead of cast iron, steel pipe is chosen, then consider the coated, black steel pipe so successfully used by gas transmission lines. It requires careful specification to get the installation procedures required because this coating can be easily damaged during installation.

On the other hand, if calculations show that the chilled water piping should be insulated, then basically you have an insulated, underground pipe just as for high temperature hot water or steam. The two main differences being that a different type of insulation can be used, and that you do not have the benefit of heat driving out any transient moisture which may enter the conduit.

It is now appropriate to consider some available assemblies of insulated, buried piping for heated and chilled water.

Figure 1 shows a common assembly. Note there is an air space and the corrosion resistance lies in the outer covering. Realize that the assembly air space when heated and then cooled will try to "suck in" air. If moisture is present, in it goes and so to work.

Figure 2 is similar except that the air space is filled with asphalt. Not too common now.

Figure 3 depends on the concrete for a moisture barrier although many times an asphalt membrane is applied over the insulation.

Notice that figures 1-4 require the pipe to slide as it expands. This cannot be beneficial to the insulation. Sooner or later, something shears and wears.

I like figure 4 simply because the drain shown at the bottom is labeled "sewer crock". In the East Tennessee hills a "crock" has a different meaning.

Figure 5 is good. Quite often each pipe is separately insulated. The base is drained. The support is a roller type.

Figure 6 is a factory assembly. The carrier pipe can be one of several materials.

The insulation is relatively impervious to moisture and "seals" to the pipe. The jacket can be PVC, reinforced fiberglas, or some similar material. Note that most plastic materials have a fairly low temperature limit and therefore are not suitable for heated lines. Again, the real problem here is to get a water-tight joint jacket.

Figure 7 is a non-ferrous assembly which works well on chilled lines. You will find the temperature limits too low for many heating applications.

Figure 8 is the sophisticated cousin of figure 7 and satisfactory for most heating needs. It is a prefabricated system of factory-assembled sections and has met with quite some success in certain areas; in other areas it has made little headway. It is a reasonably new concept, and I believe presently proprietary. As experience proves its claims, and volume makes it more competitive, it should meet with good acceptance. The first indication of this is that recently a vaguely similar item has been added to a competitor's line.

Figure 9 shows joint and seal details. Will this gland seal really keep out moisture? Our preference is a welded rather than flanged connection.

Finally, there are walk-thru tunnels which are beautiful. The only problem being dollars.

The selection of steel pipe wall thicknesses, particularly in larger sizes, can be interesting. Specify the wall thickness desired, not just "Schedule 40" or some similar term.

If the choice becomes steel pipe insulated and then encased in fiberglas, specify quite carefully the procedure for making the joints since it is most burdensome. One of our local contractors who had just finished installing pipe of this type said, "Do not believe the manufacturer's representative. He is a liar." The resins used in making the joints have a relatively short "pot life" and require excellent field workmanship and inspection. In making up the jacket joint, the basic pipe must be open to atmosphere. If the ends are closed, as the fiberglas jacket joint is made, the ambient air temperature rise during the day will cause a build-up of temperature and increase of air volume inside the casing which will cause air to "blow through" the joint and ruin it. The labor cost figure given by the factory prior to bidding was the reason the contractor said, "They are liars!"

Some contractors have had trouble using asbestos-cement pipe. This is not meant to be a basic criticism, but a caution that asbestos-cement pipe must be handled with reasonable care and installed in conformity with manufacturer's recommendations, because it does not have the truss strength of certain other types of pipe assemblies. Accordingly, the specs should carefully cover installation methods.

Earlier, preassembled, asphalt covered units were in disrepute in some areas. Recently, they seemed to be regaining favor, particularly with the advent of fiberglas outer jackets, asbestos-cement outer jackets, etc. The appeal is minimum first cost; while the real problem is massive corrosion before the defect is realized, if the outer water-resisting coating, or jacket, is broken. Many of these systems are designed to hold the casing under pressure so that a leak is at once indicated. I am strongly of the opinion that this is good textbook, sales manual publicity which never happens in an actual practice.

Insulation below ground always has the possibility of being exposed to moisture; therefore, the final covering must be a jacket made as moisture impervious and vapor-tight as possible. Here the spec writer has a multitude of choices and is tossed into the lion's den of technical claims and sales pressures. The newer plastic insulations have excellent thermal resistance and are practically impervious to moisture, but be careful about their temperature characteristics on hot lines. Generally, they are best on low temperature applications. Conversely, the old stand-by calcium silicate will handle heat beautifully, but is destroyed by moisture. Remember the possibility that a normally hot line may be cold when a flood submerges an entire system - manhole and all. As with so many components, this does not mean that a product is ruled out; rather the spec writer uses it when desirable and then specifies to get proper installation. In most assemblies it is possible to obtain any standard insulation.

Not shown is the technique of pouring and packing granular, hydrocarbon, insulating material around piping. Note that if more than "occasional submergence" is to be experienced, sub-drainage must be considered. No claim is made that this insulation will prevent water from contacting the pipe; therefore, the pipe surface, corrosion resistance must be adequate.

13. Miscellaneous Items

Now for a hodge-podge of short thoughts.

On all cast iron valves and pipe, mechanical joints are to be preferred over flanged joints. The elastomeric compression gasket, bell & spigot joints combined with mechanical joints at connection points are an excellent method.

Just as the ASME Power Piping Code requires certain welds associated with a boiler to be stamped with the mechanic's initials, on large jobs why not require all of the major welds to be stamped?

There are all sorts of hangers and the specifier needs to be precise as to use. Remember that roller type hangers and pipe saddles at hanger points are needed more often than specified. With one particular underground piping system, where the system manufacturer supplied the roller hanger, when large diameter water pipes were filled, the rod carrying the roller bent into uselessness. Fortunately, this happened before the top half of the assembly was completed. Perhaps the caution here is that even a manufacturer's assembly detail must be looked at with a jaundiced eye.

Quite often the little things cause the most problems and the biggest request for change orders. So - do not forget gauges and thermometers. You are faced with a variety of temperatures, pressures, and liquids as well as the determination concerning how many points need really to be measured. Consider the so-called "PT" test plug outlets; they can be made to accept reasonably high temperatures and pressures. Many budgets will not permit thermometers and gauges at every likely point and the test plug approach gives the facility needed at minimum cost.

Remember that OSHA, as well as good design practice, limits the maximum noise level in all areas. Pressure regulating valves can generate noise well above acceptable levels. So - include a proper noise level specification. This will eliminate certain pressure regulators and quite often require a downstream muffler, but your project will be acceptable.

It is not exactly a spec item, but when a draftsman details a manhole in which really large pipes and valves are to be installed,unless he has faced the problem before, he can easily forget the perpendicular distance required from pipe centerline to the end of an O, S and Y valve stem in the open position. Also, it is not uncommon for the pneumatic diaphragm operator of a control valve to be materially larger than the valve itself, and 3 to 6 pipe diameters to one side. Little gremlins like this can be embarassing.

Have you ever specified, or detailed, precisely how an expansion loop is to be "cold sprung"? Have you ever seen it actually done? Assuming your designer expects loops and bends to be cold sprung, you will be well advised to "brush up" on this detail and specify accurately.

14. Limitation of Liability

Eventually specifications must face the problem of professional liability. This problem occurs in many contexts - medicine, law, financial counciling, and accounting, to name a few. In all of these areas, the frequency of claims and the costs of dispute handling have sky-rocketed in the last decade. This problem is not a new one and has been met in other segments of our economy thru the specification of liability limits. This is true of the shipping industry, the transportation industry, the hotel industry, and the data processing industry. Most of you have probably agreed to such contract terms today in your parking garage ticket.

Various professions have commenced to specify liability limits in their contract; financial advisors, accountants, and even lawyers have done so in selected contexts. Specification of liability limits for design professionals has been the common rule and in fact the law in much of Europe for decades. Since 1963 the International Federation of Consulting Engineers (FIDIC) standard contract has specified that the Consulting Engineer's liability for negligent acts, errors, or omissions be limited to the amount of his fee. At least three carriers of Design Professional Liability Insurance are recommending inclusion of similar clauses in domestic contracts.

The operative results in doing so will be restoration of reasonableness in the Design Professional Liabilities situation. The professional will no longer be putting

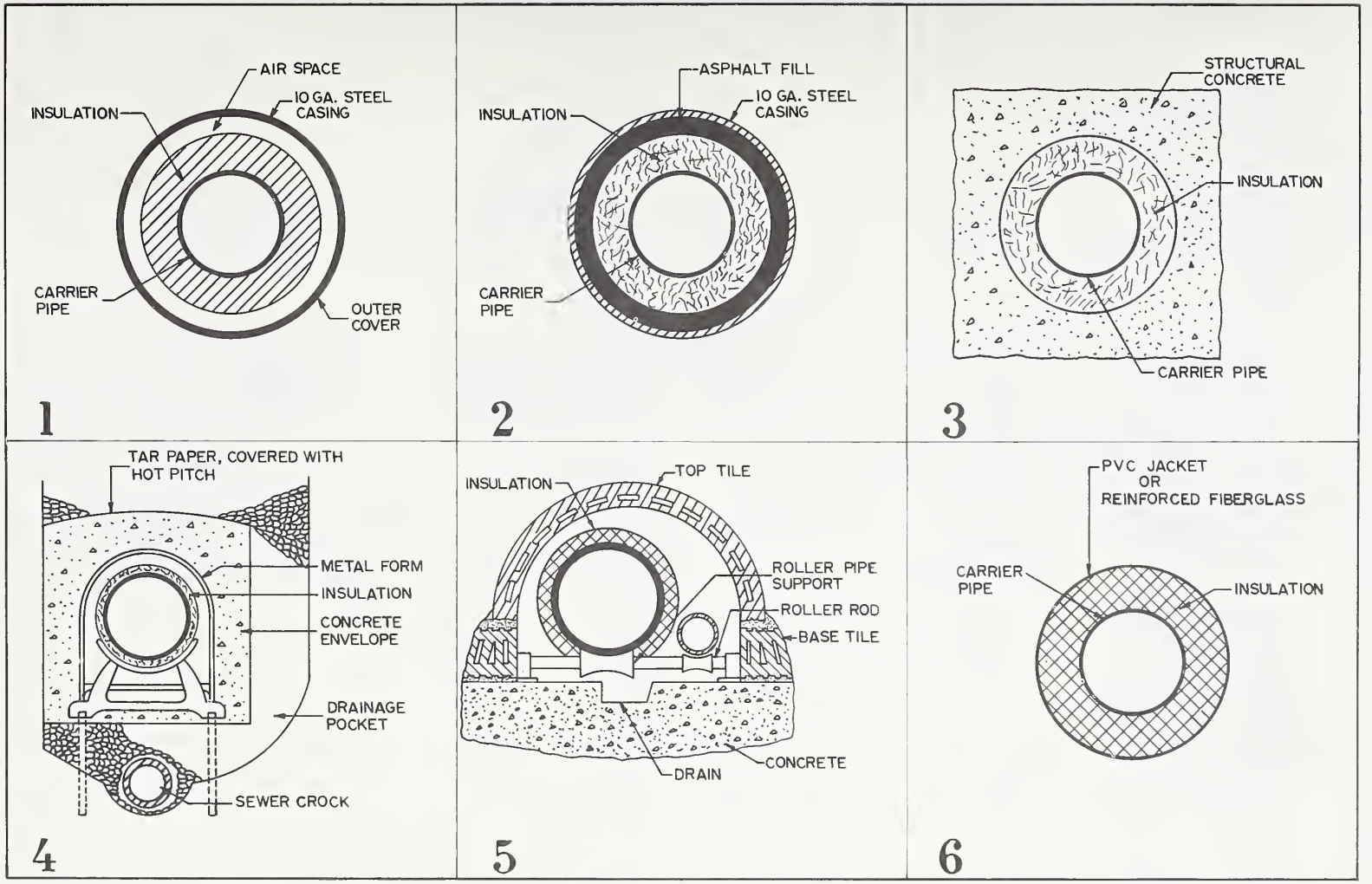
AIR SPACE
INSULATION
10 GA. STEEL CASING
CARRIER PIPE
OUTER COVER
1
ASPHALT FILL
INSULATION
10 GA. STEEL CASING
CARRIER PIPE
2
STRUCTURAL CONCRETE
INSULATION
CARRIER PIPE
3
TAR PAPER, COVERED WITH HOT PITCH
METAL FORM
INSULATION
CONCRETE ENVELOPE
DRAINAGE POCKET
SEWER CROCK
4
TOP TILE
INSULATION
ROLLER PIPE SUPPORT
ROLLER ROD
BASE TILE
CONCRETE
DRAIN
5
PVC JACKET OR REINFORCED FIBERGLASS
CARRIER PIPE
INSULATION
6

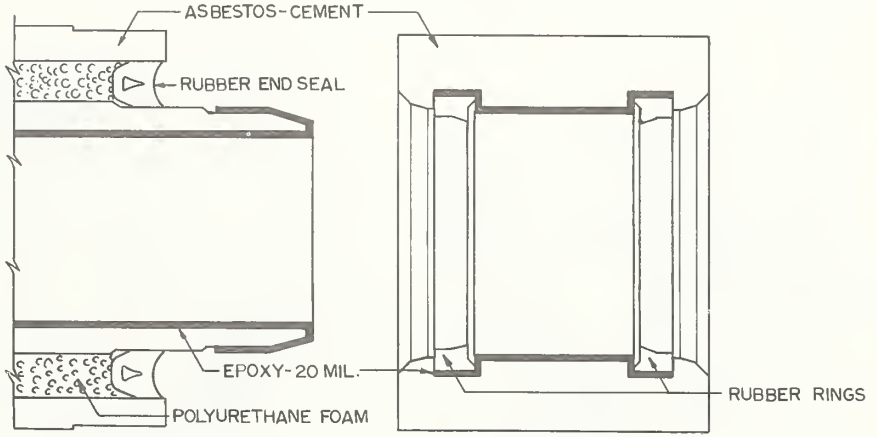

7

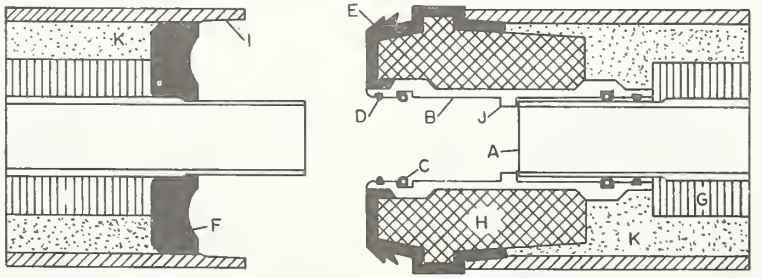

A. CARRIER PIPE
B. METALIC COUPLING
C. SEAL GASKET
D. SECONDARY SEAL- O-RING
E. COUPLING SEALING RING
F. PIPE END SEALING RING

G. INSULATION- THERMO BESTOS
H. LOCK BLOCK
I. CEMENT ASBESTOS CASING
J. THRUST SAFETY SHOULDER
K. INSULATION- POLYURETHANE

8

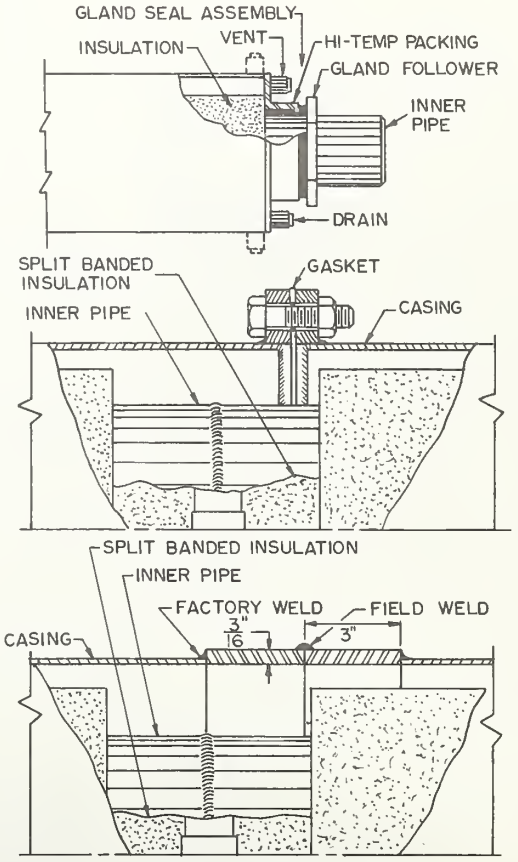

9

his entire assets on the line every time he enters a contract. Freed from this overriding concern, he will be able to devote his full attention to the best solution of his client's need.

Inclusion of such clauses in the contract documents puts all parties on notice. There is no shift of responsibility for design problems to the contractor so long as he adheres to the drawings and specifications. Conversely, claims for unreasonable expenses and damages will not be met. Because of this factor, bids will tend to be more carefully tendered, and the frequency of claims will likely decrease. This will benefit everyone including contractors. There is considerable value in having design professionals insured; however, in order for them to continue to be insurable, something must be done to change the ever increasing size and complexity of the risks assumed under the present typical contract. The model exists in the international sphere of design professional activity. Its use in our United States will benefit the whole construction industry.

15. How Best to Obtain Competition

As an Owner, you have chosen a thoroughly competent design team. They have produced a solid set of Contract Documents and their proposed budget is within your thinking. Now how to you translate this into a completed project?

Invite three or more experienced contractors to submit competitive bids.

Now how best to obtain the full advantage of competition?

Because competition is necessary and desirable, the idea of "or equal" must be maintained. The best way to do this is to require that all proposed substitutions be submitted 15 days before bid date, be acted on at once, and made the subject of the last addendum before bidding. This imposes additional work on the design team because they may have several substitutions on many items; whereas if done after contract award, they have only one substitution per item. Nonetheless, it is worth the effort since only by this method can the Owner, and not the Contractor, get the benefit of substitutions.

If I were the Owner, my preference would be: (1) a top-notch design team, (2) one manufacturer's name and catalog number with all necessary prefixes and suffixes, (3) the "or equal" clause with all substitutions requested 15 days prior to bidding and covered in the last addendum 10 days prior to bidding. In this manner, I would get good design and specs, maximum competition, and the savings would accrue to me. I would be willing to pay a slightly higher design fee for this superior service.

Fiberglass Reinforced Plastic Pipe in Underground Condensate Return Service at the Naval Weapons Center China Lake, California

H. O. Andersen

Naval Weapons Center
China Lake, California 93555

In 1967 approximately 3,700 lineal feet of uninsulated fiberglass reinforced plastic (FRP) pipe was installed for condensate return service in a steel conduit with an insulated steam line at the Naval Weapons Center, China Lake, California. The FRP fittings failed. Factors contributing to the failures were: (1) improper supports for the FRP line which prevented free movement; and, (2) the FRP elbows installed had a lower pressure rating than specified. The testing procedure followed to evaluate the product of another FRP pipe manufacturer and measures taken to provide a successful condensate return system are discussed.

Key Words: Condensate return, epoxy, fiberglass reinforced plastic, filament-wound, insulated, molded, morpholine, prefabricated steel conduit, Qualified Products List, tieline.

In June 1967, a contract was awarded to "Replace Steam Tieline, Boiler Plant No. 1 and No. 2". The work consisted of installing approximately 5,600 feet of a prefabricated steel conduit to carry an 8",125 psi steam line and a 3" condensate return line. Of this total footage, the underground portion was approximately 3,700 feet. The 8" steam line in the system was standard weight black steel, the condensate line in the aboveground portion was extra heavy black steel and the condensate line in the underground portion was fiberglass reinforced plastic (FRP). The use of FRP pipe was a deviation from type specification TS-P28f "Heat Distribution Systems Outside of Buildings". The deviation was approved since a similar system was already in successful operation at another naval installation. The design for the FRP pipe was accomplished in consultation with the FRP pipe manufacturer's representative.

The specifications required that the FRP pipe and fittings conform to military specification MIL-P-22245A (DOCKS), type III, class B, which would be suitable for 500 psi at 300°F. During construction the pipe was pressure tested to 225 psi before backfilling. Following one of the tests under which the FRP pipe failed, the conduit was cut open at the elbow for repairs and it was discovered that the FRP elbow did not conform to the contract specifications. It conformed to the specification for class A fittings, that is, it was rated for 150 psi instead of 500 psi. The contractor was ordered to remove all of the underground conduit from the site and supply pipe and fittings conforming to the contract requirements.

At the time that the contract was awarded, there was only one supplier on the Qualified Products List (QPL). When the FRP pipe manufacturer was informed that the Navy had rejected all the FRP elbows, he informed us that they had discontinued the manufacture of 500 lb. elbows but that their 150 lb. elbows would be adequate for the service and were specifically designed for systems such as that installed at China Lake. The Navy accepted a deductive change order for the use of the 150 lb. elbows and construction proceeded. The work was completed and the Government accepted the installation in October, 1968. After a few days of operation, a leak was discovered in the underground condensate return line. From then until April, 1969, the contractor performed repairs on the system under the terms of the warranty. During this time, it was believed that the failures were due to the poor factory workmanship in the assembling of the FRP pipe and fittings because all failures had been in factory fabricated joints. Some of the fittings that failed were cut open and examined and revealed that there was an insufficient bond between the pipe and fittings.

Figure 1 is a photograph of sections from an elbow that had failed and shows the voids in the epoxy and insufficient epoxy typical of many joints. Figure 2 is a section through a coupling that failed. This figure shows both a good joint and a poor joint.

When the failures started to occur, it was thought that one of the causes was that the chemical used in our boiler water treatment; namely, morpholine, was attacking the epoxy in the joints. Morpholine is a solvent for the epoxy and, therefore, this suggestion had to be investigated. It was determined that there was less than four parts per million of morpholine in the condensate water and that this minute concentration would have no deleterious effect on the epoxy in the joints.

When the field-fabricated joints started to fail, the contractor concluded that the system could not function as designed and walked off the job. The contractor had been consciencious and had done his best to make the system work.

It was later discovered that when the contractor first completed his work and was ready to put the tieline into service, he did not follow normal procedures and heat up the line gradually, but instead his workmen opened the valve on the header fully and put the full load on the tieline. The draw was so heavy that it was necessary for the boiler plant operator to light off another boiler to carry the load. This was done each time the contractor completed a repair and put the line back into operation.

During this period, a second manufacturer was listed on the QPL for the FRP pipe. He, too, qualified under type III, class A, 300°F, 150 psi. However, the fittings made by this manufacturer were filament-wound and appeared to be superior to the molded type as supplied under the contract.

A visit was made to the manufacturer of the filament-wound fittings in order to witness some deflection tests on their filament-wound fittings and on the molded fittings supplied under our contract.

Figure 3 shows the test setup. This particular test was conducted on a filament-wound fitting. The assembly was anchored at one end near the elbow and the far end was supported on a jack. The assembly was then filled with 10 psi steam and the end of the pipe was jacked up. In this test the elbow was deflected 0.417" before a slight leak developed in the joint at the back of the elbow. The test was stopped when steam started to escape from the back of the elbow. The elbow had then been deflected 0.598".

Figure 4 is the results of the same test performed on a molded elbow. In the ruptured position, the elbow had been deflected 0.138".

As a results of these tests we decided to set up a testing program to make a comparative evaluation of the two types of fittings.

Figure 5 is a photograph of the pipe and fittings undergoing the cyclic testing. Deflection cycles were performed by deflecting the pipe one half inch to both sides of the unrestrained position, 46 inches from the center line of the elbow, at a rate of 8 cycles per minute. Water hammer was produced by filling the assemblies with steam at 15 psi and introducing water at 50 psi, 80°F. Pressure cycling was produced by installing the assemblies on the trap discharge line and allowing the pressure to build up to 115 psi and then blowing down condensate from the assemblies to 50 psi. In Figure 5, the assemblies are filled with steam at 15 psi.

Figure 6 shows the assemblies when the 50 psi, 80°F water was added.

Figure 7 shows the result of the system undergoing shock from water hammer.

Figure 8 is a closeup of Assembly No. 5 and shows the method of anchoring the assemblies and introducing steam into the assemblies. Figure 8 also shows a coupling through which we drilled five holes 1/8" in diameter and patched with three layers of fiberglass strips and epoxy.

Table 1 is a tabulation of the results of the deflection tests performed on the molded and filament-wound fittings. The results of these tests convinced us that it was feasible to make the repairs to our FRP condensate line with the use of filament-wound fittings. It was our intention to replace all elbows and pipe in the expansion loops and z bends with filament-wound fittings and pipe made by the filament-wound fittings manufacturer. Replacement of the elbows alone would require additional couplings at each elbow and additional fittings in the expansion loops or z bends could be an additional source of trouble. Shortly after we started to make the repairs, it was discovered that the condensate line was not free to move in its support system. Further investigation revealed that the supports used for the condensate return line were binding on the pipe.

FRP PIPE AND FITTINGS TESTS
TABULATION OF RESULTS

20 OCTOBER 1969

ASSEMBLY NUMBER	ELBOW	EPOXY	TOTAL NO. OF DEFLECTIONS	WATER HAMMER	PRESS CYCLES 50-115 PSI
FAILURES					
11	M	M	0	--	21
6	M	FW	120	--	--
5*	M	FW	216	--	--
3	M	M	416	15	--
9	M	M	1,128	--	6
10	M	M	2,280	--	15
8	M	M	2,800	--	6
4	M	M	19,264	25	27
TESTED W/O FAILURE					
7*	FW	FW	57,964	--	219
1	FW	FW	71,960	25	219
2	FW	FW	71,960	25	219

* With "BAND AID"

M - Product of molded fittings manufacturer

FW - Product of filament-wound fittings manufacturer

TABLE I

Figure 9 shows the type of support systems used and also how the straps were cocked and binding on the condensate return line to prevent movement. It became necessary, therefore, for us to open the conduit every six to ten feet in order to remove the supports and replace them with a new support that would not bind.

Figure 10 shows the condition at an elbow when the conduit was removed.

Figure 11 shows a condition, which was not unusual, at a coupling when the conduit was removed. Our repairs, therefore, had to include replacing all the molded couplings in the straight runs of the pipe, as well as replacing all the supports.

When failures started to occur, a Federal Construction Council Inspection Team visited the site and one of the things they objected to was the support system used for the condensate return line. After badgering the conduit manufacturer for months we finally got some supports which complied with the specifications as shown in Figure 12. However, this did not resolve all our problems for, as shown in Figure 13, these supports were not all completely fabricated when shipped to the site.

Figure 14 shows the condition of the condensate return line after repairs had been made by Center personnel. Repair work included replacement of the molded coupling with a filament-wound coupling and replacement of the band strap support with a steel guide under the pipe.

Figure 15 shows the condition of the molded elbow removed from the condensate returnline and how the excess epoxy in the straight joint had flowed into the pipe to cause an obstruction. The sockets of the filament-wound fittings were designed with a taper which forced excess epoxy to the out side of the pipe. Other advantages of the filament-wound fittings is that the epoxy came premeasured was easier to mix, and had a thinner consistency, thus easier to apply and making for a stronger joint.

Cutting open the conduit to remove all supports and molded couplings made repair a time-consuming project. This tieline crossed two of our main streets, which we did not want to keep closed over prolonged periods of time. We asked the manufacturer of the filament-wound pipe for his recommendations on installing the pipe direct-buried. He assured us that this was feasible and that with proper compaction the pipe would not move in the soil.

It was 125 feet from the manhole on one side of the first road to be crossed to where it came out of the ground on the other side. Therefore, 125 feet of filament-wound pipe, couplings and elbows was fabricated aboveground and pressure tested. At 7:30 one morning, after the rush hour traffic was over, the road was closed, the trench dug, the pipe installed, the trench backfilled, and the road reopened at 1:30 in the afternoon. Later on when crossing the second street (approximately 40 feet wide) the same work was done in 2-1/2 hours.

When the manufacturer had made his recommendations on burying his pipe directly, he stated that we probably needed an anchor at only one end of the run because the pipe would not move.

To assure ourselves of the manfacture's claim that the pipe would not move, we installed a 6" inspection pipe over the elbow as shown in Figure 16 to see whether or not there was any movement after the line was buried. Figure 17 shows the inside of this pipe. A pointer was attached to the condensate return line elbow and two 6" steel scales were welded into the inspection pipe at right angles to each other for measurement of any movement. We found that we did get a movement of about 3/8 of an inch and, therefore, decided that any elbow installed direct-buried should have an anchor.

With the installation of the 125 feet of direct-buried pipe the repairs on the underground portion of the condensate line from our Boiler Plant No. 1 to the manhole serving the line going to our hospital were completed. These repairs were on approximately 700 feet of pipe and this portion was put into operation on December 23, 1969. A re-evaluation was then made to determine the best method of repairing the rest of the system. It was determined that it would be too expensive to excavate the remainder of the conduit (approximately 3,000 feet), cut it open every 6 to 10 feet to replace all supports and couplings, and reseal and waterproof it. It was, therefore decided to abandon the remainder of the FRP condensate pipe in the conduit and install direct-buried filament-wound pipe and fittings for the remainder of the system. On recommendation of the manufacturer, the filament-wound pipe was installed embedded in 4" of fine sand. We came out of the side of the manholes about four feet, we installed an elbow and made a straight run, without an expansion loop, to four feet to the side of the next manhole. Another elbow was then installed before going into the manhole. Concrete anchor blocks were poured around the elbows.

The work was completed and the entire line was put into service on 11 June 1970. The line remained in operation without any failure until May 11, 1971 when the last remaining molded elbow in the system failed. This elbow and the two couplings that were in the same run of pipe were replaced by filament-wound fittings.

In each of the manholes, the steam main was dripped and the discharge from the steam traps went into the condensate return line. However, in the manholes the condensate return line was extra heavy steel. Immediately inside the manholes the FRP pipe was connected to the steel line with flanges. The discharge from the steam traps went into the condensate line through a 3/4" dispersion tube installed inside the line.

On September 11, 1973, it was noted that steam was escaping from the vents on two of the manholes. When the concrete manhole covers were removed, it was discovered that there were leaks at the joints at each of the four filament-wound flanges in these manholes. Further investigation revealed that a steam trap had hung open and 125 psi steam was entering the condensate return line. The fiberglass reinforced plastic pipe, as stated previously, was rated for 150 psi and 300°F. The 125 psi steam has a temperature of 353°F. We had exceeded the rated temperature limitation on the pipe. We were, of course, most concerned with the condition of the joints at this time. When the first flange was removed, we discovered that the joint held but that the pipe had failed. When the other flanges were removed, we saw that these joints also held and that they "pulled glass" when removed from the pipe. We believe that the failures in the filament-wound pipe were primarily due to fatigue. The filament-wound pipe was subjected to water hammer every time the traps discharged and the steel pipe was not supported sufficiently or rigidly enough to absorb this shock. After three years of constant shock the pipe finally failed. The manufacturer suggested one possible reason for the failures was that the cut ends of the pipe were not sealed with epoxy at assembly and when live steam entered the line it found its way through the pipe along the glass filaments. Repairs were made to the system by converting the FRP pipe to steel three feet outside the manholes in order to shift the stress produced by the trap discharge from the FRP pipe to the steel pipe.

Figure 18 shows two filament-wound flanges with pipe that failed.

We believe that the system would have worked as designed if the elbows specified had been provided and if the FRP pipe had been provided with proper supports. This experience has shown us that direct-buried FRP pipe with filament-wound fittings is a low-cost, low-maintenance, easily-installed condensate return system. FRP pipe and fittings are now standard for underground condensate return service at China Lake.

Figure 1

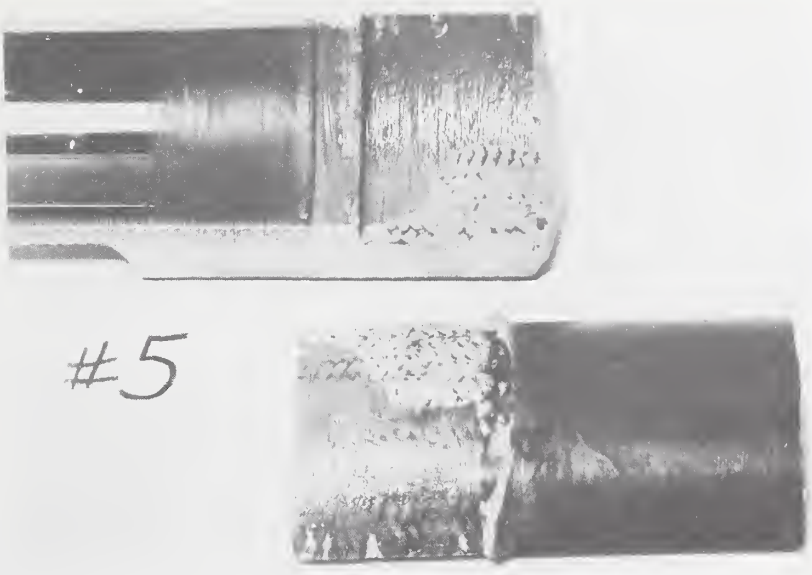

Figure 2

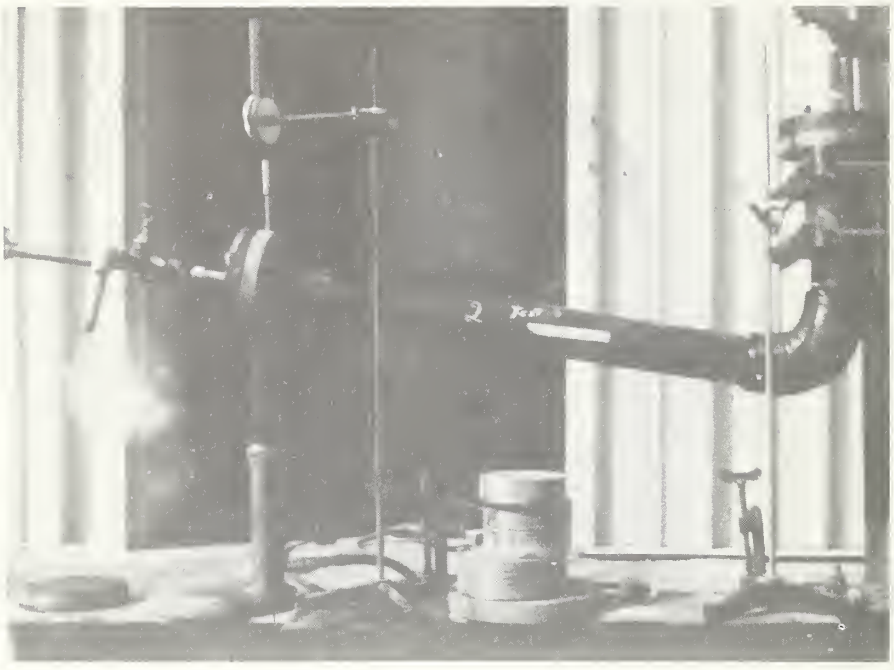

Figure 3

Figure 4

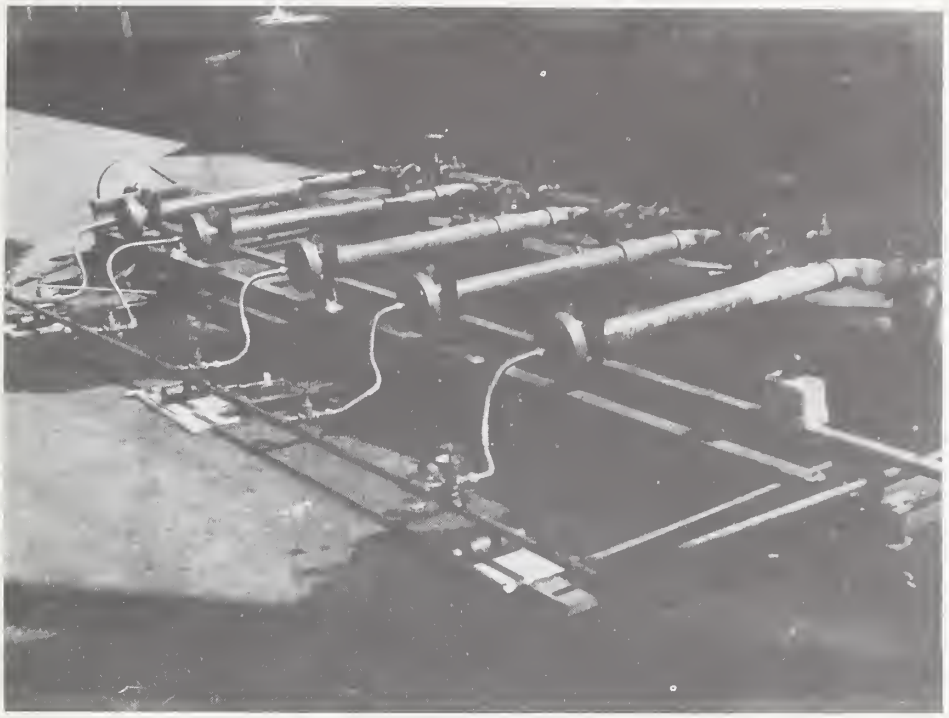

Figure 5

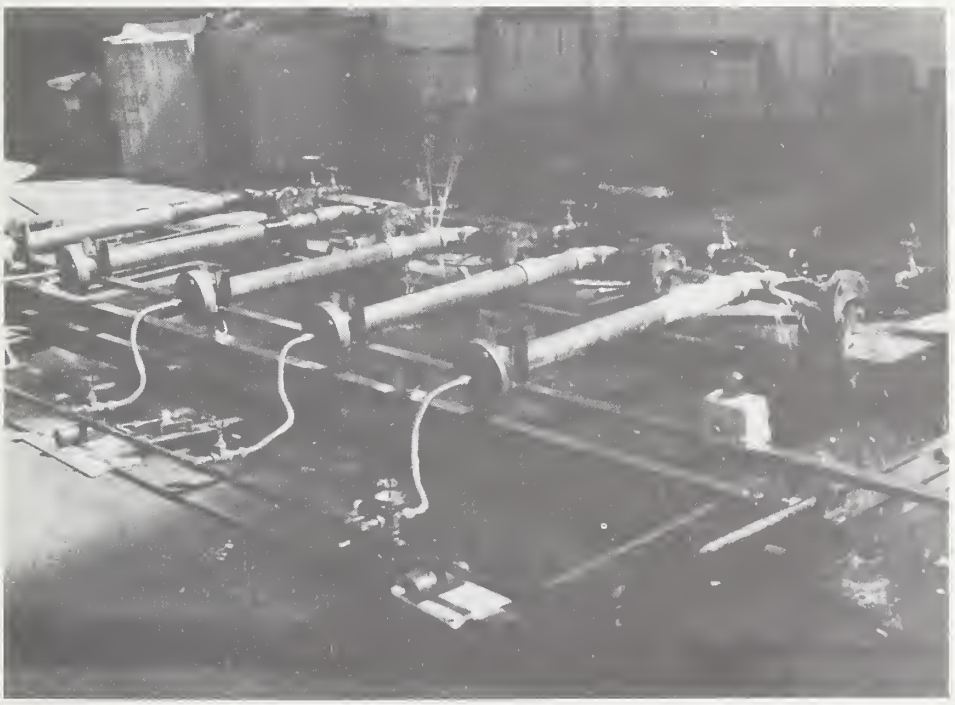

Figure 6

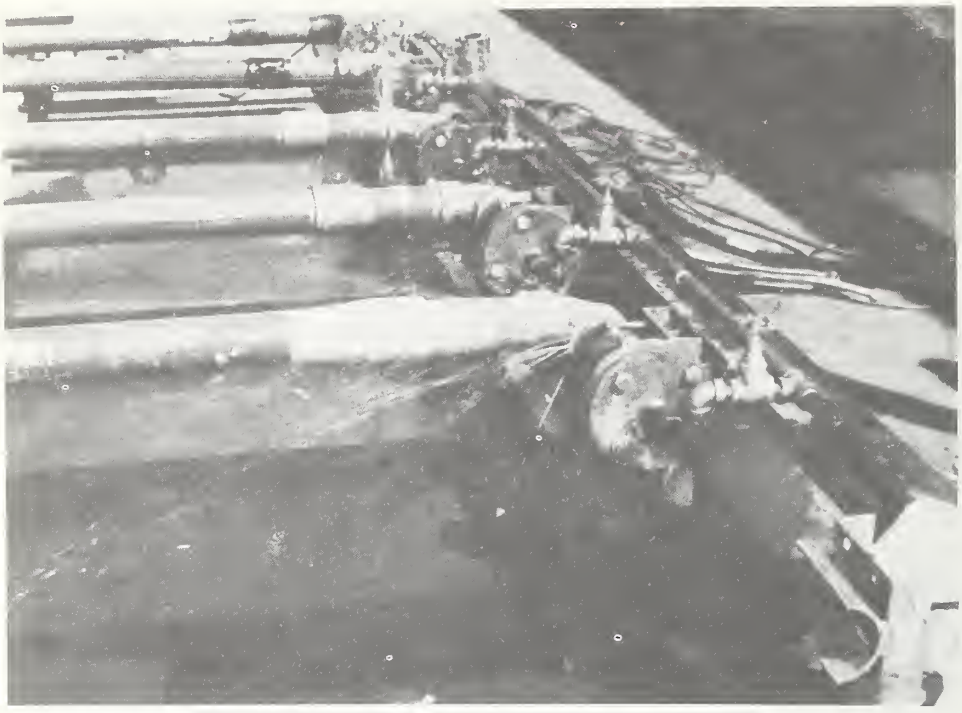

Figure 7

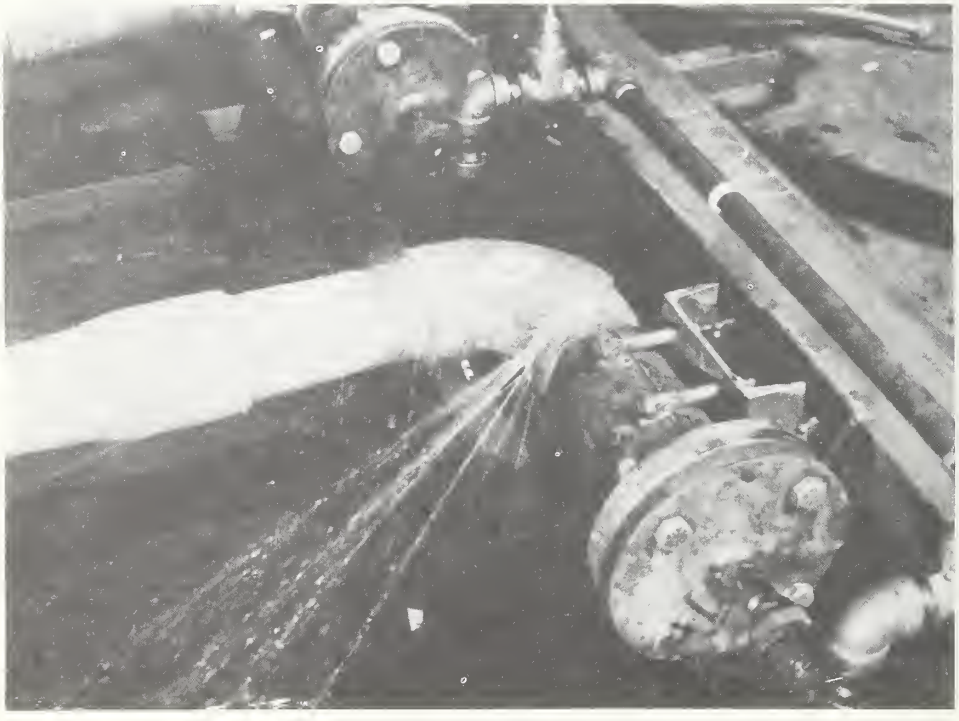

Figure 8

Figure 9

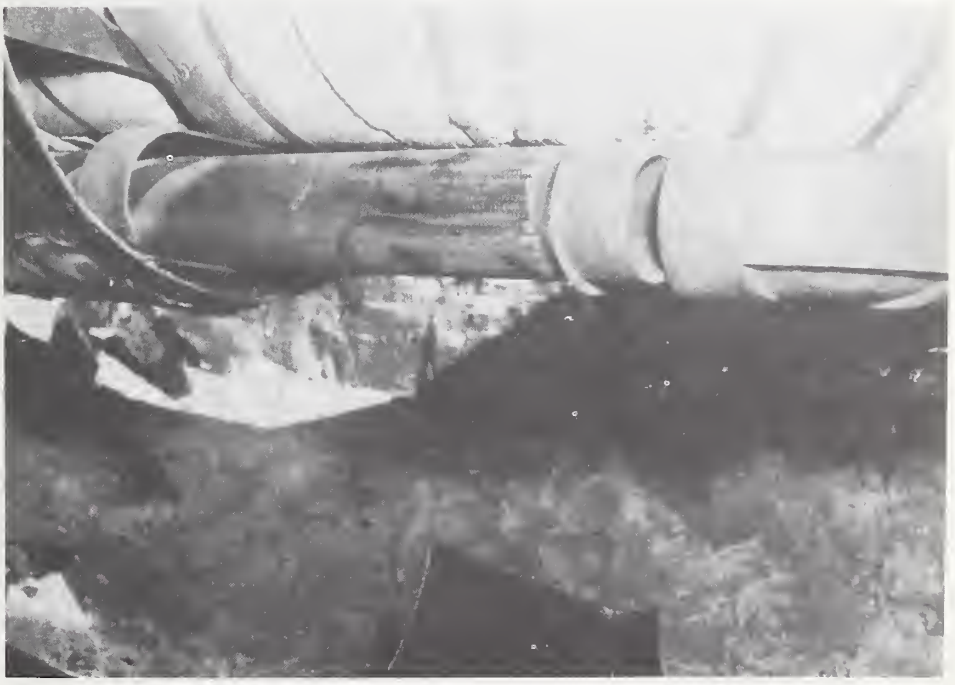

Figure 10

Figure 11

Figure 12

Figure 13

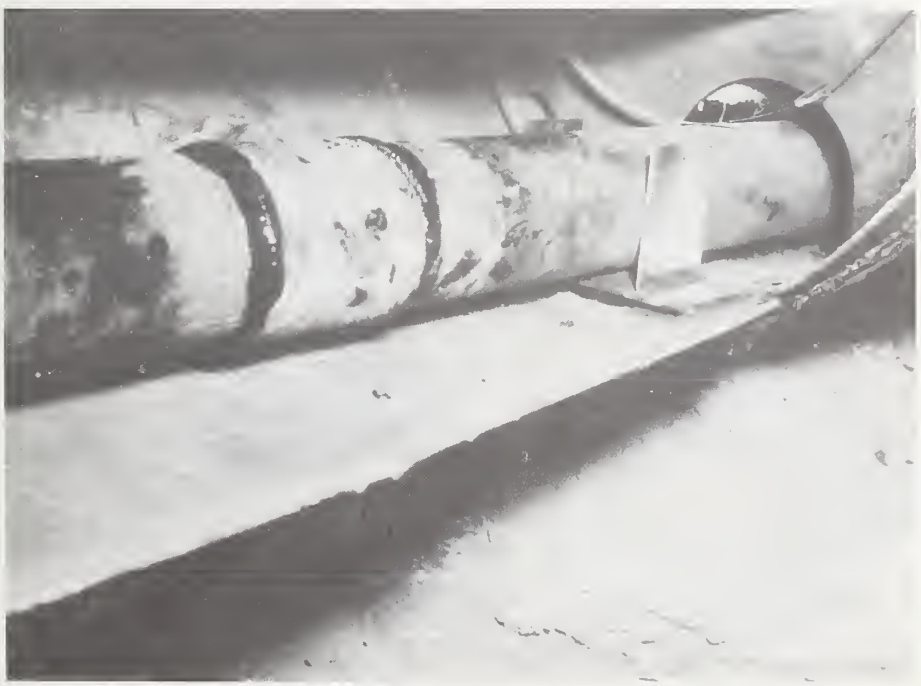

Figure 14

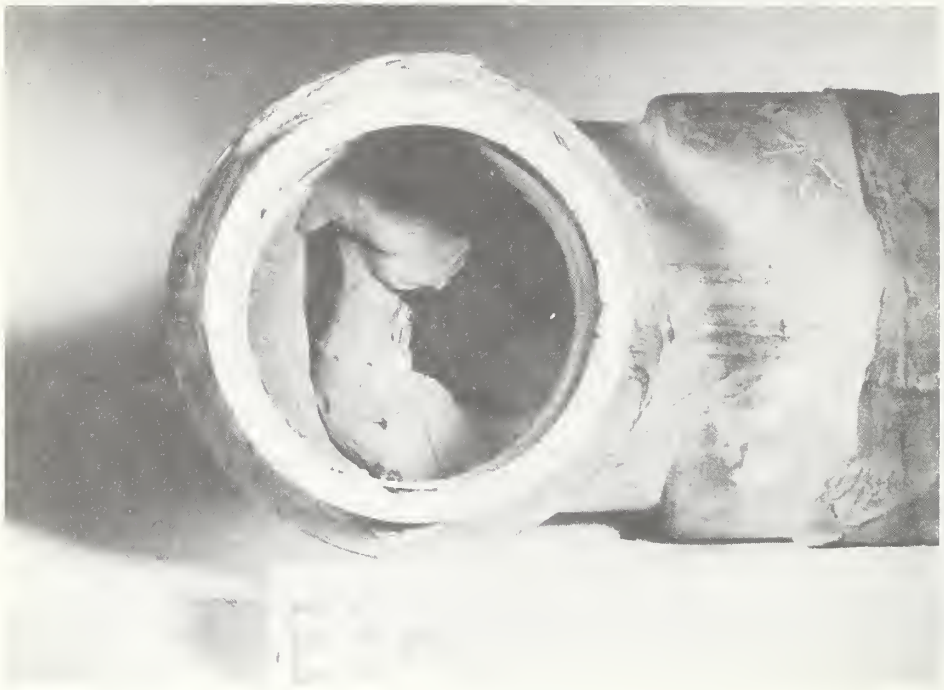

Figure 15

Figure 16

Figure 17

Figure 18

Inter-building Heat Energy Distribution Systems: Growth, Operation and Maintenance Experience

William L. Viar, P.E.[1]

University of Virginia
School of Engineering and Applied Science
Charlottesville
Virginia

District heating concepts are used in heat energy supply to the vast majority of buildings at the University of Virginia. Building ages and construction methods range from 1825 to the present. A number of buildings are too distant from the central heating plant, and are heated by their respective small fired-furnace circulating water systems. Services distributed underground from the central plant include multi-pressure steam lines, medium temperature hot water and domestic hot water. Demands have increased severely on all systems, particularly since 1952. During the period 1965-75 University building space will have been increased by about 112 per cent; not all new loads will be placed on central heating facilities. Growth, renovation and up-grading effects on operation and maintenance of heat generating and distributing equipment and personnel have been encumbering at times. Proper planning, scheduling, design and construction followed by satisfactory performance of equipment, systems and personnel have been combined to achieve adequate winter conditioning for this institution, with continuity. Summer air conditioning is relatively new here. Refrigeration units are scattered, vary from one-half to 1000 tons capacity, have been added in less than systematic fashion, to be generous. There is no inter-building distribution of chilled liquids to date. It is envisioned that central heating and central cooling concepts will ultimately be blended here for most efficient utilization and rejection of heat energy in the pursuit of controlled environment.

Key Words: Anchor, controls, corrosion, growth, metering, modern, museum, primary, reliability, renovation, secondary, system, variable.

1. Introduction

"It is difficult to operate a museum and a modern university in the same location." Such an observation was made by a professor at the University of Virginia, and it is without doubt applicable to many institutions of higher learning.

Visitors to the University are invariably favorably impressed by its historic buildings (see fig.1), formal gardens, beautiful Grounds, the Jeffersonian influence throughout. What is not seen is also impressive if one reflects on the fact that no power poles, wires, cables and pipe lines are in evidence. No unsightly overhead utilities are allowed in the central Grounds.

---

[1] Lecturer, Mechanical Engineering; Utilities Engineer, Power Plant.

It is a fact, however, if this "museum" is to function in its educational role it must be lighted, powered, plumbed, heated, cooled and equipped for sound. Some of these realisms, then are the subject of this paper. Specifically, the attempt is made to describe experiences of operation and maintenance of underground heat energy distribution systems during periods of new construction, renovation and normal performance.

The major portion of central heating facilities at the University of Virginia have been built since 1950 (1)[2]. The original distribution lines were designed and constructed by Almirall and Co.,Inc., of New York City prior to 1931. Much of this piping is still in use. Systems as they exist today are described in sections to follow.

2. Tunnel Network

A network of walk-through tunnels originates at the central heating plant. They are routed through the major building centers of the University. There are branch or lateral tunnels to a number of facilities; also, crawl-through tunnels and box trenches take off from main tunnels to many buildings. This system of conduits provides paths for pipe distribution systems discussed herein. See figure 2 for layout.

The tunnel network dates back many years, and for quite a long time the concept of "walk-through" was adhered to for major sections of tunnel as they were added. However, by mid 1960's construction costs became increasingly prohibitive and the University contracted for its first circular-section, pre-cast, reinforced concrete pipe tunnel. The RCP inside diameters were 66", 60" and 54". Consequently, these became the first of the "crouch-and-walk-through" variety of service conduit. It requires some dexterity and endurance to patrol these lines with one foot treading the curved bottom, the other foot landing up the side of the curved wall, and the stomach and back muscles engaged in continuous isometrics due to the crouch. Keep in mind that racked up pipe occupies the other semi-circle.

Tunnel temperatures vary from about 100 to 125°F. Also, the air is surprisingly dry most of the time, having a relative humidity in the order of 12 to 15%. These conditions are clearly no problem for piping, cinder blocks and concrete. However, exposure time for personnel must be limited drastically at the higher temperatures. The major physiological effect seems to be dehydration with prolonged periods of tunnel work, resulting in a tendency toward blood clots. Natural ventilation is limited, it being dependent upon the chimney effect; but the chimney is almost horizontal. Vents are built adjacent to tunnels with 75 to 100 feet spacing, and provide for what air flow there is.

In more recent years pipe with integral cover, insulation and connecting joint expansion and contraction provision has been direct buried. One short run of such pipe supplies 180 psig steam to a new building. Evaluation is not complete on this venture.

The desirability of tunnels for distribution systems is obvious. The virtual ease of access to all pipe, joints, valves, fittings, expansion devices, anchors, supports and guides makes operation and maintenance of these facilities highly satisfactory. This contributes to long system life. Another important aspect of this longevity, and even reliability, is the protection of pipe cover: less elaborate jackets can be installed initially, very little mechanical damage of insulation is experienced, and dry pipe surface minimizes corrosion.

These and other facts supporting use of tunnels versus buried pipe systems notwithstanding, it is extremely difficult to justify the high costs of even shallow tunnel work today. Too many variables from one site to another prohibit accurate generalization as to costs of tunnel construction. A recent survey (2) for this area indicates approximate levels of such costs: 66 inch ID reinforced concrete pipe, 112 dollars per linear foot; rectangular section tunnel, 220 to 240 dollars per linear foot. The increased pressure is for trenching, run the pipe between manholes, and quickly back-fill. This, of course, raises questions, such as how do you pressure test the pipe and visually inspect it? How is the pipe protected? How serious are undiscovered pin hole leaks? What kinds of motions and stresses are developed during start-up and shut-down temperature changes?

---

[2] Figures in parentheses indicate the literature references at the end of this paper.

Yet, if lengths of pipe runs, ground conditions and other considerations permit, then valves, expansion joints, anchors and branch lines can all be installed in manholes properly spaced or located. The risk, then, of buried pipe or some box trench configuration lies primarily in the integrity of the pipe joints and surface corrosion resulting from infiltration of ground water; this wetting of the pipe and insulation being almost inevitable, unfortunately.

Tunnels are intriguing, particularly to young explorers. Evidence is found often where students have been restive and have held expeditions through the "unknown reaches of the underworld". Some of these excursions have been amusing, some have not. One local high school student fell down a vertical ladder well on to steel pipe, hangers and concrete slab while touring the unknown. Broken bones and considerable fright were painful lessons to him. On another occasion a security department officer caught two architectural students in a section of tunnel one night with their dates from a near-by womens' college. The students' response to the question, "Why were you in there?" was classic. They stated, "We were on an unsponsored research project, sir". People still wonder what the girls pleaded upon return to their school.

Some concerned administrative officials have proposed tunnel security measures such as bolting down manhole covers. The writer has refused to permit this. Workmen will have enough difficulty escaping the tunnel in event of a pipe line rupture, without having to unbolt a lid.

3. Export Steam Lines

Steam is generated dry and saturated at 180 psig in the central heating plant. From an in-plant loop system steam is distributed to a variety of loads at three different pressures (180, 100, 60 psig) through a pipe/tunnel network. Although pipe diameters vary from 10 inch ID down, essentially all of it is schedule 40. The major use of the steam is for air conditioning throughout all seasons. Lesser amounts are used for laboratories, food preparation, sterilization, domestic hot water, glassware washers and swimming pool heating. Peak winter loads are about 145,000 lbm/hr; summer load averages 50,000 lbm/hr.

The most critical load on the steam system is a 550 bed multi-story teaching hospital, dependent upon steam for summer as well as winter conditioning. There are also a large number of student dormitories which are heated by steam/hot water conversion. The total number of buildings on the steam distribution systems is about forty five.

Continuity of service to the medical center and certain experimental laboratories in the engineering and sciences buildings is considered essential. Multiple valve (tandem and parallel) stations are used in most facilities for pressure reductions to proper levels of use. Typically, only laboratories require steam at boiler pressure since there are no steam driven prime movers outside the boiler plant.

All steam lines are supported by hangers or pipe racks; they are anchored at appropriate locations to force thermal expansion to joints of the slip or ball and socket designs. There are no expansion loops employed in this underground system. Pipe guides are incorporated in support racks adjacent to expansion joints to assure alignment of pipe and joint. Of course, some slip joints are built with helpful internal guides.

Lubrication of expansion joints, both the highly polished slip (and ball) surfaces and packing annuli, is extremely important. The lubrication has at least three beneficial effects: a) reduces friction and wear and developed forces due to expansion; b) keeps the packing material soft and pliable, thus minimizing leakage at the joint; c) prevents corrosion of the coated parts.

Drip legs and traps are located at essentially all pipe risers and even in some intermediate points of long pipe runs where there might be slope but no abrupt change in elevation. See section 4 for additional comments about steam/condensate trapping.

Shutdowns of steam lines become more difficult to schedule as quantity and variety of load is added on the systems. There is no "convenient" time for an outage. This problem is common to any type of distributed service. The consequences at the University are three-fold: 1) schedule work to be done on an overtime basis at odd hours, an operating decision; 2) specify and purchase expansion joints that can be packed under pressure, a design decision; 3) require proper maintenance procedures, with supervisory follow-up.

An example of this latter policy is the now normal (simple) practice of "doping" new gaskets when making up a flanged pipe joint. A graphite and mineral oil mixture or commercial preparation, coated on a gasket assures easy removal if it ever has to be replaced again. One might ask, "Why plan on reworking the joint if it is done properly the first time"? A weak answer to this would simply be that all too often a steam line depressurized and cooled down for repair work will have new and unexpected leaks when brought back up to operating conditions. There are truly a number of variables just in the joining of pipe flanges. Main steam line shutdowns are limited to annual outages when possible.

4. Condensate Return Lines

Condensate is returned to the boiler plant to the extent that it can be recovered. Some uses, such as autoclaves, inherently result in no return of that particular mass. Much effort is expended to assure recovery of all other condensed steam, with emphasis on correcting leaks. The economy of returning useable condensate is well established, where line lengths are not prohibitive.

The need for high return rates becomes obvious to operating personnel when an abnormal loss of condensate (with related high raw water make-up rate) results in drastic changes in boiler water chemical treatment residuals. This plant's maximum operating pressure and temperature, and the quality of make-up water available have to date permitted minimal boiler feedwater treatment. However, 92 to 95% condensate returns is essential to continue operation without more sophisticated pre-treatment.

The condensate receiving and storage tank, or simply hotwell, operates at atmospheric pressure, and the liquid is either drained to it by gravity or is pumped back from the numerous buildings, the mode depending on elevation changes.

In addition to the previously noted need of high recovery rates, there are several other identifiable difficulties peculiar to condensate piping. These include high pressure trapping to return lines, and corrosion within these lines.

Where possible all export steam lines are trapped to flash tanks in near-by buildings. There, the flashed vapor can be piped off and utilized in low pressure heaters (domestic hot water, etc.); the saturated liquid can be drained to condensate tank/pump sets. Unfortunately, all trap stations are not reasonably close to flash tanks. As a result, in such locations the trapped mixture of vapor and liquid are injected directly into adjacent condensate return lines.

This invariably has two detrimental effects: 1) the vapor, that leaked past the imperfect trap plus that flashed due to the throttling process of the liquid to a lower pressure region, at temperature differences involved, causes thermal shock or "hammer"; 2) the high velocity flow, if improperly directed, erodes the "back wall" of the main line. An alternative to the erosion is in-line entry of the flow if possible (say at an elbow) or at least, install the trap discharge pipe at the least angle possible relative to return pipe center line.

Thermal shock or hammer in this application is probably best reduced or avoided by the use of a trap with some "storage" capacity. That is, if the period between trap discharges is sufficient, there should be some sub-cooling with reduction of flashed vapor. Obviously, no trap leakage or blowing through of vapor is desirable under any condition; it is, in fact, a high cost loss.

The second cited return line problem is internal corrosion. Generally, the outside surfaces of pipe in dry tunnels suffer very little corrosion, although not zero. Condensate, however pure and free of minerals, can be corrosive or support corrosion. In the trade the problem is referred to as pitting or grooving type metal loss. The reduction of wall thickness is almost never uniform. Dissolved oxygen causes pitting; dissolved carbon dioxide results in carbonic acid and causes grooving of the metal wall (3).

Both gases can originate in raw water make-up and will be transported to the steam generator in the absence of proper deaeration. This can result in some boiler internal corrosion. Carbon dioxide is also generated in heaters, such as boilers, by the presence of carbonate and bicarbonate alkalinity in make-up water to the boilers, in the absence of sufficient pre-treatment.

Oxygen usually infiltrates the condensate system at low pressure heat exchangers which are fitted with vacuum breakers on the "vapor side" of the exchanger. The combi-

nation of reduced specific volume during condensation and the modulation (closing stroke) of the steam flow control valve results in reducing pressure to a vacuum; the breaker opens and air flow is induced into the exchanger. Of course, when the steam valve re-opens pressure should go positive again. So the conditions are transient, not steady state, and the effect is more oxygen intake to support internal corrosion.

Successful control of return line corrosion depends upon a number of variables, not the least of which are lengths of lines and load demands on the lines (i.e., intermittent or steady flow). Chemical treatment for control has included the use of filming and neutralizing amines apparently since the late 1940's. These compounds are fed into steam generators directly or with feedwater, and vaporize with the steam; some are injected directly into steam headers. There are transport and reaction characteristics of amines which favor some for short distribution lines (e.g., morpholine), and others for long lines (e.g., cyclohexglamine). Also, octadecylamine, a filming (wetting) compound is said to disperse readily in all lines (3). There are, of course, other products used in return line protection. Since there are some constraints on chemicals used where steam will contact food preparation and sterilization equipment, knowledge of these limits must be available and adhered to.

Several runs of condensate line have been installed here out of schedule 80 pipe, in an attempt to prolong line life. The greater costs for heavier wall pipe might be justified if metal surface loss were uniform.

It has been the writer's observation that all forms of corrosion are counteracted or controlled with varying degrees of failure. Corrosion might be akin to entropy, which has been related to time: all are ever on the increase.

Certainly in the field of water (and other process fluids) quality control, small industrial and institutional needs must be assessed and evaluated by competent consultants. Larger industry is presumed to have in-house capability. Treatment programs in general cannot be random efforts. Successful treatment of systems results from thorough knowledge of the chemistry of the fluids and persistent and continuous follow-up by operating personnel.

5. Central Hot Water Circulating System Renovation

In 1965 a comprehensive study (1) of existing hot water circulating and steam supply capacities, and proposed growth of the University indicated need of major modification. Heat energy distribution capacity would have to be increased significantly in order to provide for physical plant expansion during the next ten year period. To illustrate the point, the 1965 floor space was approximately 3,198,000 square feet, and a master development plan proposed a ten year increase of 3,568,000 square feet - a 112% expansion.

Much of the new space would be in close proximity to hot water lines. Of heating alternatives available, it was decided to triple the energy carrying capacity of hot water mains emanating from the central heating plant. This would be done by conversion or up-grading of the central low temperature system (190°F supply, return 170°F) to a medium temperature (260°F supply, 200°F return) system. The major advantage of this plan was utilization of existing pipe sizes because no mass flow increase would be needed. Original oversizing of pipe easily accommodated the specific volume increase due to higher temperatures. Another significant improvement would be in overall water (building) temperature control. Original control was gross: outside air temperature was sensed and recorded at the heating plant. Manual adjustment of pneumatic valves regulated steam flow to three heat exchangers. Revised controls would be decentralized or far more localized, as a zone or small building group regulation.

Despite avoiding construction of entirely new facilities, renovation costs would be high. Essentially all cast iron fittings and valves would have to be replaced. Additional expansion joints and pipe anchors would be required. New utility or equipment rooms would be needed, the space for which was precious. Major piping changes within the heating plant would be made. Of course system extensions would be added as new buildings were constructed.

Wiley and Wilson, Consulting Engineers of Richmond and Lynchburg, Virginia were retained by the University to conduct the aforementioned study, and further, to design the revised system and supervise construction. They had designed essentially all new heating facilities since 1950. Their performance throughout this project, which spanned about five years from inception, was outstanding.

The scope of the project was such that construction was in phases, and required two summers and some winter work to complete. A contract per phase was let: Phase A included all utility room work, plus the mechanical interfacing of medium and low temperature water systems; Phase B involved all tunnel and main line changes, such as anchors, guides, expansion joints, valves, fittings, manholes and replacement of sections of inferior pipe; Phase C was the extensive equipment rearrangement and replacement, and re-piping within the heating plant. It should be noted that the Phase C contractor was simultaneously installing a packaged gas/oil fired, 90,000 lbm/hr steam generator in the heating plant (also engineered by Wiley and Wilson).

This work was scheduled and performed with minimum disruption to the University. Coordination between contractors, sub-contractors and operating personnel was essential and for the most part achieved. Brief shutdowns (e.g., the entire heating plant) and system inter-connections were trying periods for operators and crafts alike.

Fortunately, this extensive effort was completed without major injury to any workman. However, the transition was not without unusual incidents. In three separate events and locations old slip-type expansion joints failed to slip properly on start-ups during the fall of 1970. In one place a rather shallow reinforced concrete anchor pier literally rolled up out of the tunnel floor slab under stresses of expansion. In the second case, the concrete pier held, but 7/8" bolts (some reduction in section due to corrosion) which fastened the anchor plate to the pier failed in shear.

The third cited problem involved a cast fitting which must have been 35 years old; it was a 10 inch flanged, side outlet, reducing 90° elbow. Apparently a moment developed at the lateral connection and one side failed in tension. This particular failure occurred about midnight with 35°F outside air temperature, and drained the system which supplied almost all of the original buildings in the central Grounds, including the Rotunda (fig.1). Needless to say, the fitting was replaced during the night, albeit with an improvised fitting built up by a skillful welder. Other less memorable incidents also beclouded this renovation. Suffice it to say the writer was relieved when some sense of normalcy was regained.

6. Medium Temperature Hot Water Supply and Return Systems

Approximately 88 buildings are heated by a combination of primary and secondary hot water circulating systems. The primary system, medium temperature hot water (MTHW), originates at the central heating plant (see fig.2). The supply temperature is nominally 260°F and constant throughout the year; return temperatures vary seasonally, but range down to 200°F. Maximum flow rate is 3000 gpm, provided by turbine (two) and motor (one) driven pumps which deliver through a change in elevation of 104 feet, maximum.

Since heat energy delivered is a function of both flow rate and temperature drop, and since supply temperature is essentially constant, the flow must be increased when return water temperature drops to some reasonable minimum. This low limit depends, of course, on secondary system system operating conditions; i.e., there must be sufficient Δt between the primary and secondary waters. Unfortunately, the pumped quantity of MTHW is coarsely controlled, simply by the starting and stopping of a pump, rather than varying truly (modulating) as a function of system load. MTHW supply temperature is held constant by an automatic pneumatic temperature sensing and control system which positions steam supply valves to the primary heat exchangers. This control is quite smooth and helps compensate for on-off operation of second and third pumps.

Expansion tanks (two) have sufficient size to accommodate volume changes in system water resulting from normal load/temperature variations. The tanks are tied together and to the return water line via a three-way plug cock. This arrangement allows use of either or both tanks in the system. To date the gas blanket in the tanks has been compressed air. Obviously, there is cause for concern that there is active tank corrosion due to the air; however, because of needs to add and bleed off pressure periodically it appears too costly to use nitrogen in this case.

The question of corrosion in the MTHW system itself is unresolved. For years there has been essentially no use of inhibitors in this distribution complex. A number of sets of corrosion test specimens, both copper and steel, have indicated very low metal loss rates. These favorable results were predominately during the long years of this system operating at 190°F and lower. Since major renovations in 1969 and 1970 (see section 5.), with temperatures at 260°F, evaluations of no chemical treatment have not been completed. Certainly normal operation includes minimizing loss and consequent

make-up of water in the system. There is provision for making up with deaerated water. But this procedure clearly penalizes a marginal boiler feedwater treatment method (see section 4.) and is not encouraged.

There are two flow control features in the MTHW system which should be noted (see fig.3). They are in addition to flow demands imposed by secondary systems. Both features are peculiar to low load conditions. The first is a set of small (1") by-pass lines at network extremities which cause a low but steady flow from supply to return headers. This assures normal temperature MTHW up to an idle or temporarily satisfied secondary system. The idea is much the same as recirculation of small quantities of domestic hot water. This advantage adds to pumping costs.

The second low load response device is a cross-tie line and control valve located about halfway out in the system. This valve has a pneumatic positioner which responds to a differential pressure controller sensing both supply and return line pressures. As load drops off (secondary systems reducing requirements of MTHW), supply pressure increases until the preset differential (about 40 psig) is reached at which point the recirculating valve begins to open. This device is simply intended to prevent excessive pressures in the other portions of the piping, but does also increase pumping costs.

7. Low Temperature Hot Water Recirculating Systems

Satellitic sub-systems (secondary) operate off of the primary hot water circulating and the 100 psig steam distributing systems. There are 40 sets of these facilities and they are simply referred to as low temperature hot water (LTHW) systems. They operate at essentially constant flow but variable temperature, both supply and return. Maximum supply temperatures are in the order of 200°F.

The interface between MTHW or steam and LTHW is effected by either shell and tube heat exchangers or by mixing valves (see fig.3). The selection of method was a design choice, required because of old piping and cast iron radiators and other low pressure convectors in older buildings (see section 4.). Heat exchangers were required in systems supplying these buildings. Mixing of MTHW and LTHW was done only in more modern buildings, but not even all of these. Where new buildings included fan-coil units for conditioning, water-to-water exchangers were also used as well as expansion of steam into the coils. In all cases temperature regulators position valves to control the flow of steam or MTHW to heat exchangers or directly into LTHW piping or fan coils, depending on type of system.

Each LTHW unit supplies several zones in a building in cases or small systems, or more extensive ones heat up to eight or ten buildings. Outside air and water temperature sensors at the utility or equipment rooms have total control over valve actions, pump operation, and hence supply water conditions. Unfortunately, this results only in zone or even building(s) control, but not individual room control. However, the scheme is a major improvement over a single outside air thermostat at the heating plant controlling the water supply temperature to all 88 buildings on the central MTHW system (see section 4.).

Even with more localized temperature control, it remains a problem in all secondary systems to balance flows to be compatible with optimum temperatures. When all else fails the unscientific procedure of window watching is brought to bear on this problem: buildings are surveyed externally and an open-window count is made. The results of this field work dictates which thermostats are to be lowered further and which building flow rates must be reduced. The controls vendor shudders at this approach. Despite this untoward reaction, with energy problems being what they are, it is expected the procedure will be employed with more rigor in the immediate future.

8. Domestic Hot Water

Domestic hot water is generated and distributed in a variety of ways at the University. There are individual building heaters and multiple building units. Energy is supplied to the heaters by higher temperature water (MTHW), steam, electricity and gas firing. There is little that is unique about any of the several systems, with the possible exception of the one with its heaters located in the central heating plant. This network includes two 1800 gallon storage tank-type heaters with U-tube steam coils, extensive distribution piping, and small recirculating line and pumps.

These tank heaters were installed in 1952, with 5 psig steam supply off an auxiliary turbine exhaust header, plus make-up from a pressure reducing station. The inherent variability of domestic water once-through flows, coupled with gross, bang-bang steam valve operation prompted virtual abandonment in place of these heaters. The load swing adversely affected turbine(s) operation and even boiler loads. The latter problem was particularly significant during the era of no summer air conditioning, in which time domestic hot water heating represented 80 to 90% of boiler load. The control valve problem was not mastered.

A temporary solution which lasted for about 10 years was an experimental instantaneous heater provided by a manufacturer in Richmond, Virginia, in exchange for extensive test performance data. The steam (100 psig in this case) flow regulation on this unit was much better than the original tank valves, primarily because of superior demand change (temperature drop) sensing and high steam pressure. The better sensitivity did not reduce steam requirements, but definitely did reduce high peak flows followed by complete shut-off because of quicker response. The instantaneous heater served extremely well until it was overloaded hydraulically in 1966. It was simply a case of adding load until the water pressure drop across the heater became excessive, with attendent low pressure at upper levels of supplied buildings.

At that time needed design changes included several alternatives: 1) purchase another instantaneous heater of like size; 2) purchase another such heater at about double size; or 3) reactivate the storage tank heaters and make them work. It was decided that plan 3) had to be attempted to avoid additional capital outlay.

Throughout several weeks of intensive effort numerous good ideas were tried and laid to rest. Two facts, however, prevailed during the entire experimental procedure: 1) demand changes had to be anticipated; 2) it is impossible to hold the outlet water temperature and steam inlet flow both constant. The question of constant values was resolved quickly by compromise: hold neither the temperature nor flow constant, let each vary some, but avoid extremes of either parameter.

The need to anticipate hot water flow changes was ultimately satisfied by sensing effects of these changes indirectly. A 3/4" cold water impulse line was tapped into the side of each tank with nozzle end aimed directly at the thermostatic elements (see fig.4). In this layout the 3/4" line originated upstream of a pressure reducing valve on the plant supply water line. Consequently, there is always a flow through the 3/4" line if there is any flow at all through the tank.

When hot water flow increases several things happen: tank pressure drops, main cold water flow increases, "signal" water flow increases, thermal element cools quickly; finally, effects are tranduced to pilot positioning of the high pressure steam supply valve. This process causes prompt modulation of the steam valve rather than on-off operation, and is decidedly an improvement over original performance. It is likely that even more positive control can be obtained by interposing a pneumatic system between the capillary and main valve. However, this has not been done here.

Another refinement attempted with some effectiveness, and is still used, was a small by-pass line with manual valve around the automatic main steam valve. During high water flow periods the valve is opened several turns to satisfy a fraction of the total steam. This fraction, then, is constant (per adjusted position) and allows the main valve to control only the remainder of the "base load" and all of the peaks. The manual valve could be replaced with an automatic one and the new combination (one large, one small) adjusted to operate in step fashion.

The cited modifications used did, in fact, reactivate the two tank heaters. They are used individually and each can carry existing domestic hot water loads for the medical center and numerous other buildings. Furthermore, they have been tested for successful parallel operation. Significantly, in addition to favorable temperature and steam flow control, large storage capacity has been restored with these semi-instantaneous heaters, at low cost.

9. Chilled Water

Chilled water is not commonplace at the University of Virginia. Only in recent years, perhaps seven, has general summer air conditioning been allowed in state supported institution buildings. The University was no exception. Prior to this relaxation of fiscal control the only conditioned spaces were laboratories, some medical center areas and early computer centers, all of which required the expenditure. Comfort conditioning was simply a luxury and unjustified.

Thinking has changed. Now, the modern buildings have great wall expanses with no windows, or immovable windows. Now, there must at least be mechanical ventilation. Now, cooling is no luxury, it is a necessity. Now, the failure of conditioning equipment is not temporary discomfiture, it is practically a disaster.

Despite the trend toward modernization, the University still has no extensive chilled water distribution system. Where chilled water is generated, it is distributed within that building only. During this year a small complex of new buildings will start up and be supplied hot and chilled water from a modest central plant. But the vast majority of facilities are cooled with local equipment, if at all.

Centralized chilled water generation and distribution is a future requirement here, and will involve great capital expenditure.

10. Personnel

All inter-building heat energy distribution facilities are operated and maintained by a force of four men, one of whom is responsible supervisor. The scope of this work ranges from washing down tunnels to major line shutdown and repair work, to operation of electro-pneumatic control systems. Unscheduled shutdowns and equipment failures are generally avoided by the routine performance of these men. In some quarters their efforts at maintenance would be called protective, positive, periodic, progressive, programmed or preventive. To them, their efforts mean continuity of services.

Training is essentially done on the job, and includes to the extent possible experience in the boiler plant as boiler operator, and involvement in in-plant maintenance. Conversely, boiler operators are also trained in outside utilities. Thus, an understanding of inter-related systems at both ends is established.

Patrolling of tunnels and utility rooms, repair work and logging of data are done during the 8-4 shifts every day. Off-hours maintenance is occasionally required in instances of essential service lines; e.g., a needed shutdown is not allowed which would affect hospital operating rooms.

Recruitment of skilled and experienced men has been typically difficult. Good men are already employed, it has been observed. This inherent problem is aggravated by the fact the Commonwealth of Virginia Personnel Department has traditionally been unwilling to compete realistically in the labor market. For example, there needs to be a crisis-type shortage of people in a craft or labor grade before serious consideration is given to improving the applicable wage rate.

11. Conclusions

Underground distribution systems at the University of Virginia probably typify the institutional approach to heat energy supply to a large variety of building types and designs. This variety is indicated when one realizes that the University opened for instruction in 1825, and a drama building in the Fine Arts Center is currently approaching completion. Buildings of both eras are being heated by steam and/or hot water via the subject distributions systems (however, not since 1825---).

Growth and renovation have clearly been the major "problem areas" from an operating and maintenance standpoint. Continuity of services during these transition periods has indeed been difficult. Normally, operation of lines, pump and heater sets, controls and chemical treatment are reasonably routine. Periodic maintenance coupled with operating inspections usually permit seasonal shutdowns and overhauls. Next to shutdown restraints the most significant maintenance problem has been procurement of replacement parts. Obsolescense, costs, cumbersome purchasing procedures, and near-zero distributor inventories make it hard to plan and execute proper repairs.

The official enrollment at the University this session is 13,732 students, total, all schools. The projected head count for 1982 is 15,900, representing a 15.8% increase for the period (4). Physical plant expansion plans referred to in section 5 indicated an increase in building space of 112% from 1965 to 1975. Considering both these numbers, it appears that only modest building construction will occur from 1975 to 1982.

Although heat energy distribution facilities are nearing adequacy for the next eight to ten years, cooling systems are woefully lacking. The concept of central refrigeration with distributed chilled liquid has not yet been accepted, primarily

because of the newness here of summer comfort. With existing energy problems, perhaps it is best the people are not yet acclimated that way. However, the writer foresees eventual consolidation of central heating and cooling plants, the merging of which will yield a favorable energy balance for year-round conditioning.

12. References

(1) Wiley and Wilson, Consulting Engineers, A technical report on Central Heating System Alterations and Additions Required by Ten Year Building Program for University of Virginia, October 15, 1965.

(2) John C. Reid, Professional Engineer, Richmond, Va.

(3) Betz Handbook of Industrial Water Conditioning, Sixth Edition, p.197 to 200.

(4) Office of Institutional Analysis, U. of Va. Charlottesville, Va.

Figure 1. The Rotunda, University of Virginia.

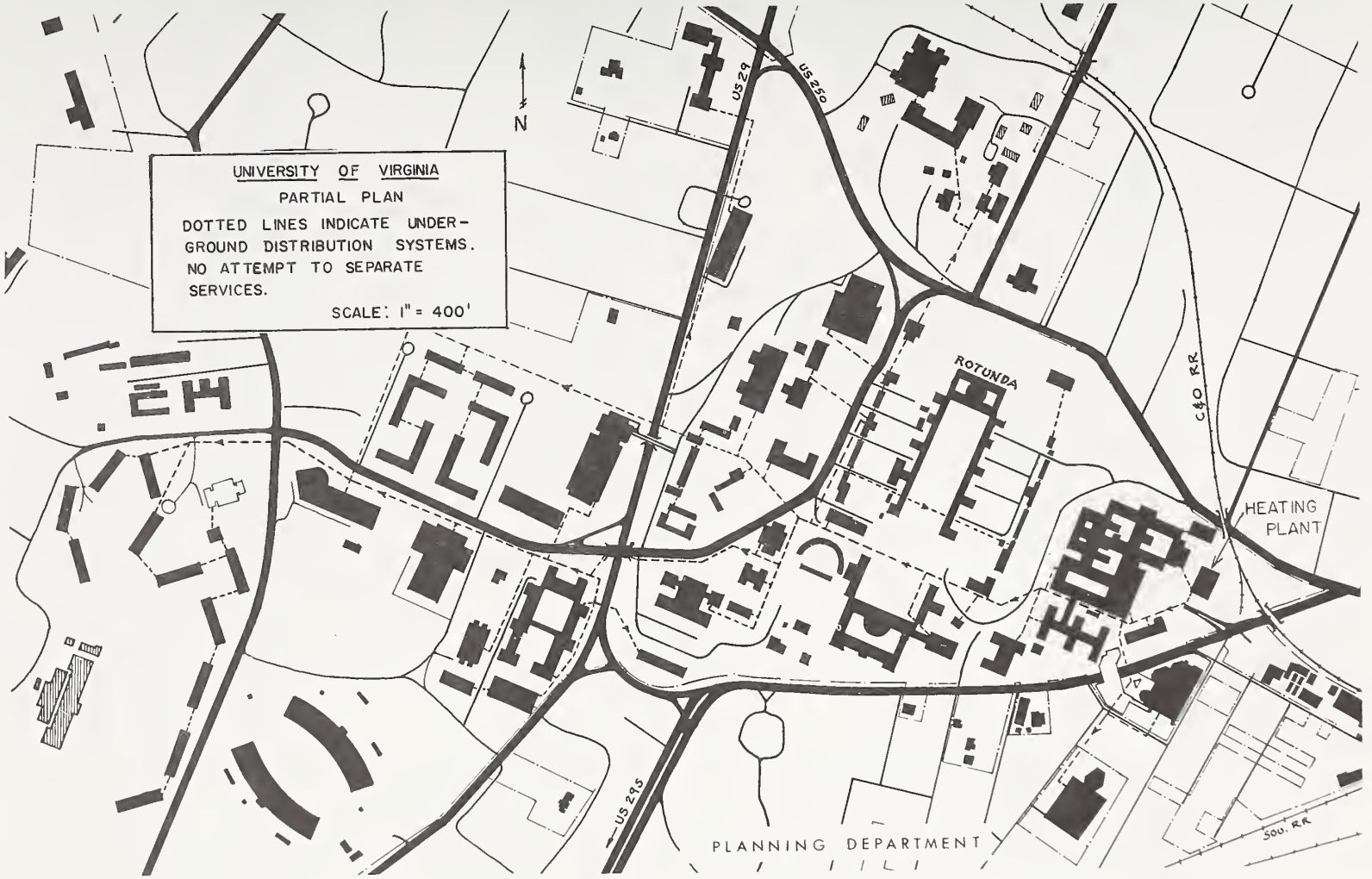

Figure 2. University of Virginia, Partial Plan View. Steam and Hot Water Distribution Layout.

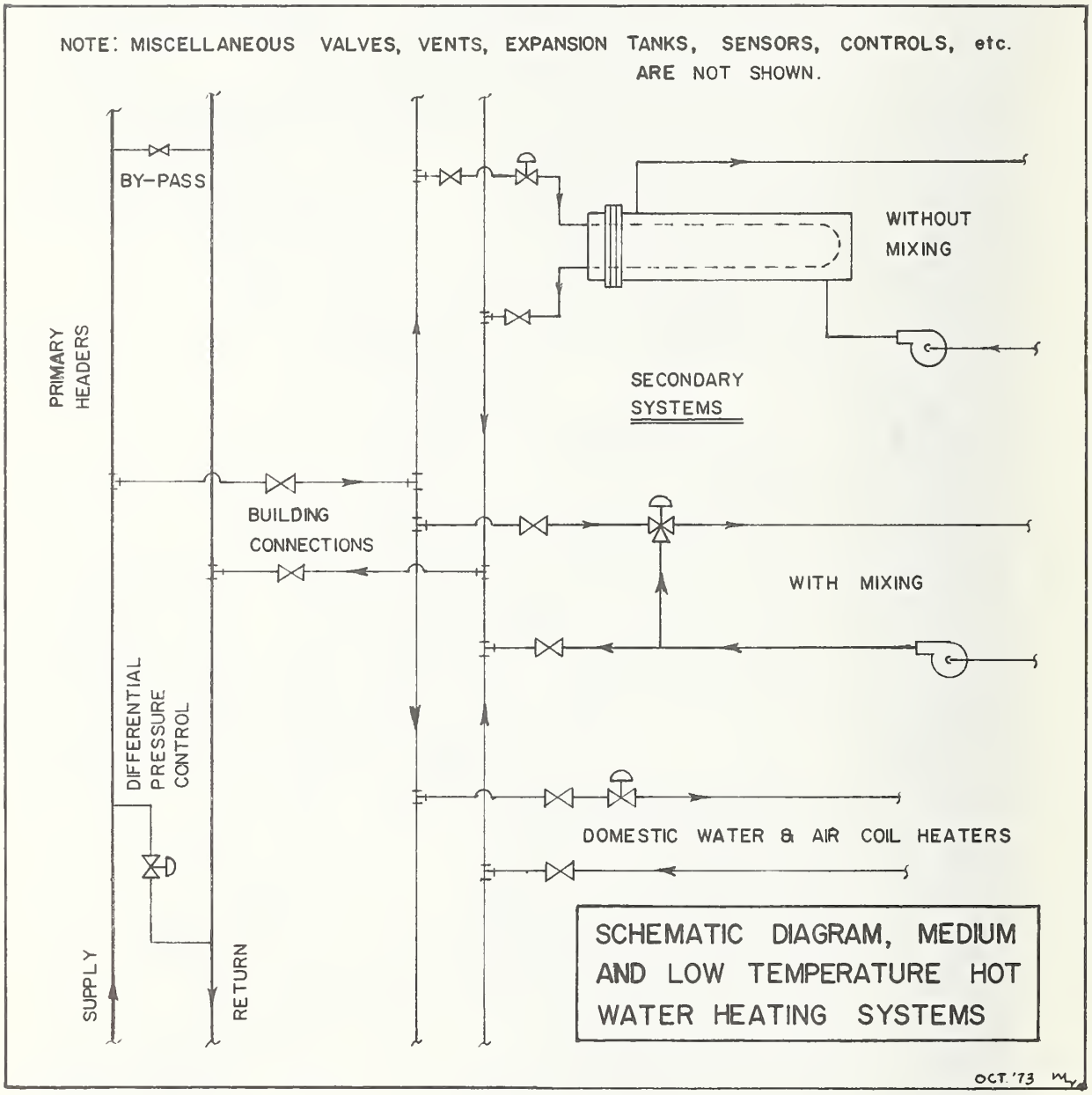

Figure 3. A Schematic Diagram Showing Primary and Secondary Systems Interconnections.

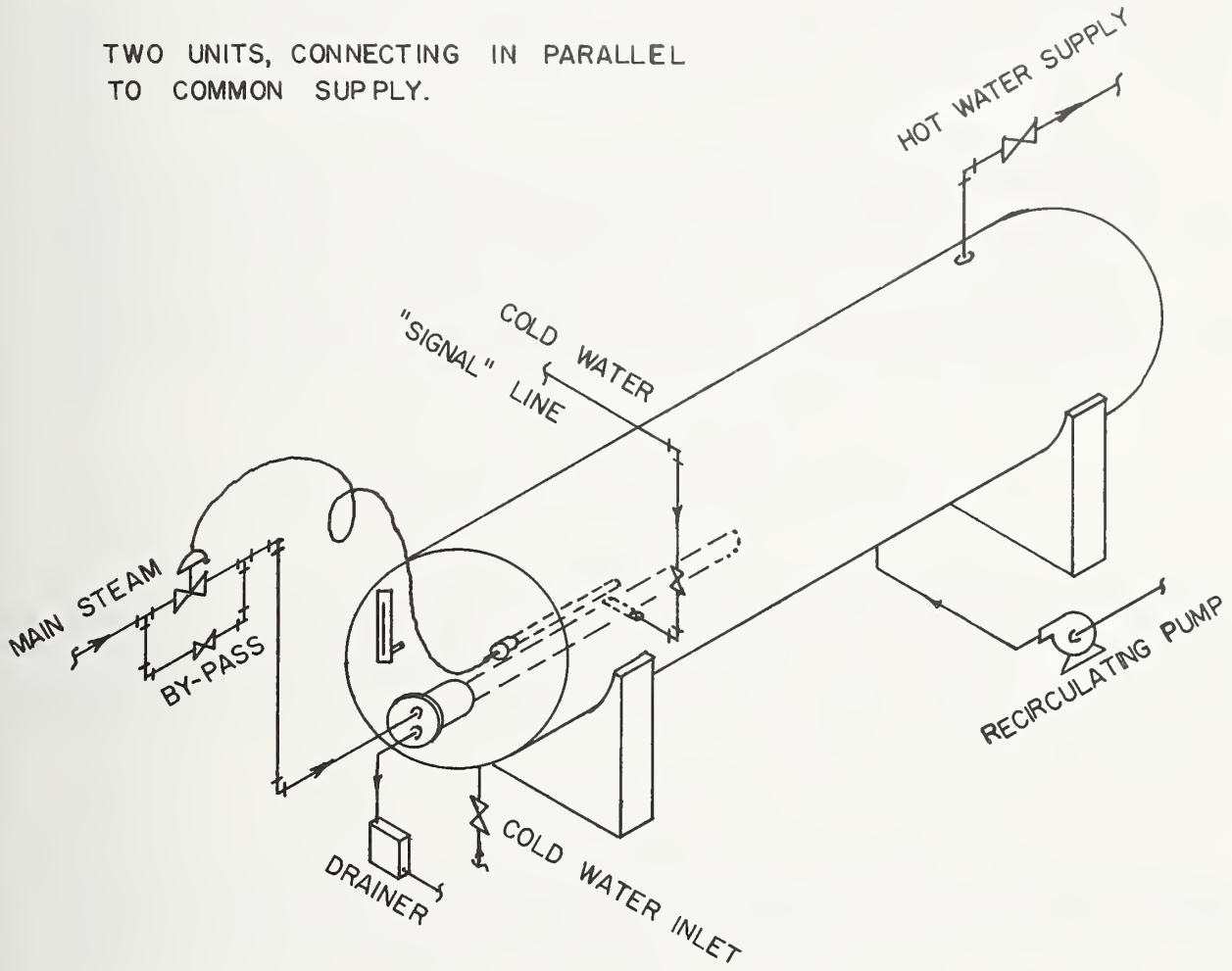

SEMI-INSTANTANEOUS DOMESTIC HOT WATER STORAGE TANK HEATER

Figure 4. A Schematic Isometric View of a Storage Tank Domestic Hot Water Semi-Instantaneous Heater.

Cathodic Protection Can Be an Effective Means for Preventing Corrosion on Underground Metallic Structures

Raymond G. Young

Capitol Corrosion Control Corp.
Silver Spring, Md.

Cathodic protection can effectively prevent electro-chemical corrosion on underground metallic piping and other structures for as long as the use of the piping is required. However, the system must be designed to suit the soil environment, and physical make-up of the structure by someone fully experienced in such work. Thorough inspection must be maintained during installation to assure that the system is properly installed as verified by a completion check by a knowledgable person. Included in the final report should be a maintenance program to monitor the cathodic protection system preferably one that can be made by regular maintenance personnel. The maintenance program should be carried out fully, and any failures that occur should be remedied promptly otherwise early failure of the structure may be experienced.

Key Words: Cathodic protection, insulating joints, non-conducting coating, sacrificial anodes, soil resistivity.

1. Introduction

As the losses from electro-chemical corrosion have grown (estimated at over six billion dollars last year alone) it has become routine to specify cathodic protection for underground steel piping and conduit systems. This has resulted in some piping systems being under protection immediately after installation, however, they do not remain that way for any length of time, since even if the cathodic protection system is properly designed and installed, it simply will not continue to function without regular monitoring, and prompt remedial work as required.

2. Good Design Vital

Cathodic protection system longivity is dependent in large part on whether the system was designed by a competent corrosion specialist. Too often this phase of the work is assigned to someone not thoroughly experienced in the art resulting in ineffective design specifications that do not achieve cathodic protection, or in some instances may actually hasten early failure of the piping. In other instances the cost of the cathodic protection may be unreasonably high as a result of "over-design".

A minimum of five years experience in this field, engaged in "responsible work" to gain competency, should be required on the part of the person doing the design work. He should also be required to make available a list of installations that he has designed that are operating satisfactorily. Reference to the term "engineer" is intentionally avoided since there is no formal "corrosion engineer" discipline available in this country. Cathodic protection desigr is more an art than a science since many of its basic principles were developed empirically.

2.1 General Design Requirements

While the individual designs must be "tailor-made" to suit the requirements of a particular installation all designs should include certain basic features for the economical achievment of cathodic protection.

(a) Pipe Coating

Effective coating is absolutely essential if the cost of the cathodic protection system is to be held to an acceptable level. Coating for pipe that is to be buried must have the following characteristics: good electrical insulation, low moisture absorption, resistance to environmental contaminants (cinder backfill, etc.), resistance to physical damage by impact and handling, resistance to deformation by soil pressure and stress, easily applied and maintained with good adhesion and cohesion.

There are a number of coatings that have given satisfactory service over the years as well as some new ones that appear to be equally acceptable. The tar of coal and asphalt applied over primers made of cut-backs of the basic tar element used have been the principal coatings over the years along with asphalt mastics consisting of a formulation of sand, lime, dust, fibers, and an asphalt binder. In recent years some very good coatings that are synthetics - primarily epoxies or phenolics - chemically or heat "cured" immediately after application have been developed. They are extremely tough and have excellent bonding characteristics.

A selection of the type coating to be used must be made based on the consideration of the following: the environment in which the pipe will be buried as to texture, uniformity, varying degree of moisture, and soil shrink factor, operating temperature ranges, degree of handling to which coated pipe will be subjected prior to burial, and experiences with similar materials buried in this environment. This knowledge will enable the designer to select the type coating that will perform best in a particular type installation.

Design specifications should also include instructions for the handling, storing, installation, and field joint coating to get the best coating job possible. This aspect of corrosion control can not be stressed too strongly, since at least 98% of the prevention of corrosion damage depends on good coating.

(b) Electrical Isolation

Electrical isolation from all piping not to be cathodically protected (piping inside buildings, etc.) must be specified to prevent metallic connections to large low resistance to earth structures that require very large amounts of cathodic protection current.

Normally raised face insulating flanges or dielectric unions are specified to isolate the piping to be protected. These are installed in the utility lines even though the cathodic protection system is designed to protect the outside surface of the conduit. Installation instructions such as torque and torquing sequences should be included in the design book.

(c) Application of Cathodic Protection

Application of cathodic protection may be accomplished either by the attachment of galvanic anodes (such as magnesium or zinc) to be sacrificed in place of the structure to be protected, or by an impressed current system with a rectifier and ground bed of inert anodes depending on the location of the strucure, and the amount of protection current calculated to be needed.

For normal piping installations the criteria used for protection is to provide 3 ma of current for each square foot of bare pipe surface with one per cent of the total surface in contact with the soil considered "bare". Tests have been made that indicate that on jobs with adequate inspection the holidays (breaks in coating) constitute about 1/4 of one per cent of the total coated surface. One per cent is used to allow a "safety" factor.

The amount of current required for each size pipe on a job can be roughly calculated by determining the total square feet of pipe or conduit exposed to the earth, multiplying that total by 1% "bare" to get the total number of square feet of bare pipe, and multiplying that total by 3 ma (.003 Amps.). This gives the total amount of current that must be drained to make all parts of the surface cathodic.

The amount of current that one sacrificial anode will drain can be determined by making a soil resistivity survey along the rout of the proposed piping. Tables are available that list how much current an anode will put out at various resistivity levels. By dividing the amount that each anode will drain into the total amount required for each pipe run the number of anodes can be determined. Anode spacing along the piping can be specified by dividing the muber of anodes required for each size pipe into the total length of that size pipe.

Explicit detail drawings should be included of the anodes placing them a minimum of three feet away from the pipe, and with the anode leads connected to a common collector cable terminated in test stations so that the amount of anode current can be measured to determine the anticipated life of the anodes.

Test stations to check the operation of the cathodic protection system should be installed to afford a complete survey of the system -- usually one at the end of each run. The number of test stations, however, should be held to the minimum number required for proper survey, since they are difficult to maintain, and costly to restore.

Upon installation the criteria used to measure effective operation of the system is usually the first one listed by the DOT Pipeline Safety Act as satisfactory. This involves the measurement of a potential (voltage) of the pipe to the soil to a copper sulfate reference electrode placed directly over the pipe or cinduit under test more negative than 0.85 volts. Under most circumstances this is a reliable procedure.

3. System Installation

The installation instructions should actually be included in the design book, but are highlighted in this section since they are the items to which the installer and the inspector must pay close attention during installation to prevent - if possible - costly remedial work.

(a) Material Protection and Storage

All material should be checked prior to the start of the job to make sure that all corrosion control items are on the job site. Anodes, etc. must be protected from the weather since if the backfill bag gets wet, and sets up prior to burial, the anode is ruined.

(b) Anode Installation

The anodes should be installed at the approximate location shown on the drawings after the trench is opened - possibly before the pipe is laid. If the location of the anode is staked offset from the trench, the machine operator opening the trench can also dig the holes for the anodes, or they can be installed using a post-hole digger.

It is very important that the anodes be at least three feet away from the pipe to get proper distribution of the anode current. The lead wires should be spliced to the collector cable, and the connections coated carefully. Watering down the anode after it is placed in the hole is also very important to assure prompt functioning of the anode.

(c) Coating Repair and Backfill

All joints, fittings, etc. in the underground portions of the conduit or piping must be coated and checked with a suitable holiday detector as well as any coating damaged in handling - prior to burial. Clean backfill - free of rocks and debris - must be used to at least one foot above the pipe to avoid coating damage.

(d) Insulating Joint Installation

The insulating joints are the most common source of difficulty in installing a cathodic protection system. They should be installed very carefully as to torque, etc., and checked for effectiveness as soon as they are installed. They should not be used as "tie-in" pieces. They should be assembled with two short "pups", tested, and welded into the line as an assembly to avoid breaking the bolt sleeve insulators which will short out the flange.

(e) Test Station Installation

The test wires on the conduit should be attached by Cadwelding or braizing, and protected during backfilling. Two wires should be attached in case one wire should be cut or go bad. When backfilling is within two feet of final grade, the test boxes should be set so that about 18" of slck wire extends out of the top of the box. Take measurements to locate the test stations to readily visible objects and record on the "as-built" drawings.

(f) Completion Survey and Report

After the system is installed it should be checked for effective operation by reading the pipe to soil potential (Vg) of the conduit at the test stations to a copper sulfate reference electrode placed directly over the conduit using a high resistance voltmeter. If all readings are more negative than 0.85 volts, it indicates that the system is under cathodic protection, and operating as designed. The readings should be recorded on a suitable data sheet, and included in the final report.

4. Maintenance

As mentioned earlier all too often cathodic protection systems that were properly installed are never checked from the day of their installation. Vandals, grounds keepers, construction forces, etc. seem to combine to destroy test stations, insulating flanges are made ineffective by maintenance repair work, cast iron mains are laid in metallic contact with the protected piping making an "accidental" short, and a host of other problems that occur over a period of time which if not detected in a regular survey can result in the loss of cathodic protection.

Therefore, it is advisable to install permanent reference electrode - jack type test stations on impressed current systems to permit monthly monitoring by maintenance personnel, and schedule an annual thorough check-up by a competent corrosion control firm. This check-up should include renewing all mechanical connections, overhaul of the rectifier, etc.

Systems employing sacrificial anodes should be checked at least every six months. Small, easy to operate Vg (pipe to soil) meters are available so that this work can be done by regular operating personnel. If the readings remain the same as the installation readings, it indicates that the system is still functioning properly, and the readings can be recorded until the next re-check.

If the readings change, or there has been physical damage to the test stations, etc., it is often possible for the maintenance personnel to locate the problem. If the readings go down (less than 0.85 volts) it is usually the result of either insulating joint failure, physical damage to anode/pipe connections in the test stations, new construction along the route of the piping. A simple resistance measurement across the insulators can indicate whether or not they are still effective while a visual inspection along the pipeline will usually reveal any recent construction activity that might have caused the failure. If the reason is still not apparent, the services of an experienced corrosion control man should be obtained.

Operation and Maintenance of Steel Conduit Systems

Robert J. Ruschell

R. J. Ruschell Company
Laurel, Maryland 20810

Thousands of man hours have been devoted to preparing a "Guide Specification for Military Construction, Heat Distribution Systems Outside of Buildings". This specification has been in mandatory use since 1965 by the Department of Defense and other Federal and State Agencies. The System Design and Installation Procedures have incorporated the knowledge and experience of many of the most able mechanical engineers from government and private industry. Only minor changes have been made to the Guide Specification during the past twelve years. No guide or procedure has been issued in regard to maintaining these underground systems. Additional years of useful, economic life could be realized from a program of inspection and prompt repair procedures where indicated.

Keywords: Design specification, guide and installation procedures; steel conduit system.

When the criteria for the present Department of Defense Guide Specifications for Heat Distribution Systems was developed by the Building Research Advisory Board, Building Research Institute, one precept was predominate, i.e., it was considered fundamental that at some time in the life of an underground heat distribution system the conduit and insulation may or will become flooded. This situation could occur during the initial installation or at any time, thereafter, due to mechanical damage. flooded manholes, internal pipe leakage, corrosion of the conduit or neglect.

The steel conduit specified is of a thickness to withstand earth and superimposed loads at nominal depths and is outside coated and wrapped to prevent exterior corrosion. Corrosion from the inside is the basic cause of conduit system failures.

The insulation specified is calcium silicate which has the proven ability to retain it's insulating and mechanical properties after being subjected to boiling action. Calcium silicate can also be thoroughly dried out after being water saturated.

When one accepts the premise that the heat distribution system may or will become flooded, some means, therefore, must be devised for draining the conduit, drying out the insulation and repairing or correcting that which permitted the entry of water into the system.

The presently acceptable conduit systems are required to be proven air tight after backfill and are designed to provide a minimum of one inch air space between the insulation exterior and the conduit interior throughout the system. The steel conduit system must also have a common invert through the use of eccentric reducers. The conduit terminal ends are equipped with drain and vent openings at all buildings and manholes. These design requirements, affectionally known as "D.D.T" (Drainable, Dryable, Testable), permit the owner to inspect the system, perform preventative maintenance and help locate areas where corrective repairs are necessary, even though the system is buried and out of sight.

Owners of conduit systems should utilize the features which have been provided them by establishing a sensible inspection program which will include regular examination of the conduit vent pipe openings for any signs of water vapor emission. Drain caps located at the bottom of the conduit or end plate should be periodically removed in order to ascertain if water is present in the conduit system.

Manholes should be kept dry, well ventilated and all pipe and fittings insulated. Many conduit systems have been saturated by a combination of flooded manholes and missing drain and/or vent plugs. A means to avoid this type of carelessness is to extend the conduit vent piping to a point above the manhole top, ending it with a 180° gooseneck and also

installing drain valveson the drain pipe nipples.

In the event that water or moisture is detected in the conduit system, the water should be drained and the conduit system then completely dried by blowing air through the conduit from one terminal point to the other. It can be determined when the system is dry by holding a cool mirror near the vent pipe opening, allowing the forced air to strike the mirror. When the mirror no longer fogs, the system is dry.

After all precautions have been taken and the conduit system has been completely dried out as described above and a subsequent inspection indicates the presence of water or moisture, a more serious problem exists. The source of water entry must be located. Several methods have been successfully employed to accomplish this. The most successful method used in my experience is the use of an odorant, such as mercaptan. This is introduced into the conduit vent opening in liquid form. The conduit system is then capped and pressurized to approximately 15 PSIG. Because of the overwhelming odor, someone other than the person who introduced the liquid to the conduit cavity walks the conduit path. When the odor is detected, the opening in the conduit will be in close proximity.

Another method of locating a conduit leak is to pressurize the conduit to approximately 15 PSIG and then lay down a two to four inch thick layer of fire extinguishing foam on the ground above the path of the distribution system. Air bubbles will appear above the point of the leak. Freon detectors, sound sensors and other such devices can also be used in connection with the internal pressurization of the conduit system.

As previously stated, conduit exteriors are well coated with coal tar or asphalt coatings overwrapped with saturated felt. Corrosion of the conduit interior, caused by permitting moisture to remain within the system is the basic cause of failure and/or damage. Insulation can be completely dried by forcing air through the system while it is in operation. Damage to the conduit system can be located and repaired. Inspection of the system can disclose missing drain plugs or the presence of water vapor.

Exterior corrosion of the internal service piping will not occur if the steel conduit system is properly maintained.

There have been instances of conduit system failures caused by internal corrosion of condensate piping. Prior to publishing of the mandatory Guide Specification for Military Construction, Heat Distribution Systems, it was common practice to house both the steam and condensate piping in a common conduit. Therefore, a failure of the condensate pipe resulted in a total failure of the entire conduit system. The guide specification corrected one aspect of this type of failure by removing the condensate line to a separate conduit.

Recent technological advances and years of testing have produced a pipe composed of fiberglass reinforced epoxy resin capable of withstanding 300° at 150 PSIG. This pipe also has a capability of resisting the corrosive effects associated with condensate return.

Manufacturers of steel conduit systems have prepared operation and maintenance instructions. These should be read by maintenance personnel and posted in a conspicuous place in the boiler room or other areas where it can be seen. One such instruction sheet is attached to this paper.

In closing, it should be stated that much emphasis has been placed upon a strict material type specification and test procedures to assure the owner of a proper installation. The care and feeding of the conduit system has been mostly ignored. It is time that users of conduit systems that offer the features of "D.D.T." take advantage of the inherent features which provide for long system service life.

In view of the costs involved in replacing an underground heat distribution system, it would seem mandatory that a program of inspection and maintenance be devised and enforced.

Experience with Central Heat Distribution Systems in Cold Regions

Wayne Tobiasson[1]

U.S. Army Cold Regions Research and
Engineering Laboratory
Hanover, New Hampshire 03755

Buried, on-grade and elevated central heat distribution systems have been built in the cold regions of the northern hemisphere. Heating lines are frequently routed along with water lines, sewers and other utilities in conduits known as utilidors. In areas where the ground is permanently frozen, systems are generally designed to prevent thaw and subsidence of the supporting soil as well as prevent freezing of liquids in the lines. One approach is to support the utilidor on piles. Such utilidors are often elevated several feet above the surface to minimize snow drifting problems. Elevated utilidors can be obstructions to the movement of individuals and vehicles in a community. Elevated utilidors subjected to differential heave and settlement have developed gaps through which cold air infiltrated and caused freezeups.

The bulb of thaw created around a buried conduit containing warm utilities can be a collecting point for ground water, especially in the spring. Flooding can result unless the conduit is watertight or provisions are made to redirect the ground water. Many large buried utilidors in Siberia are ventilated in the winter to annually refreeze the surrounding soil.

Provisions for winter maintenance are important features of all central heat distribution systems in cold regions.

To illustrate the above points, design and performance data are presented in this paper for several central heat distribution systems in Alaska, Canada, Greenland and Siberia.

Key Words: Air leakage, Arctic, central heat distribution systems, construction materials, drainage, insulation, permafrost, seasonal frost, snow drifting, utilidors, ventilation.

1. Introduction

In 1971 the American Public Works Association and the Engineering Foundation co-sponsored a conference on Engineering Utility Tunnels in Urban Areas. At that conference I presented the paper "Utility Tunnel Experience in Cold Regions". That conference emphasized the interaction of utilities routed in a common tunnel. This subject has been touched upon several times at this conference and I believe the attendees would profit by examining the proceedings of the APWA-EF Conference [1][2].

[1] Research Civil Engineer

[2] Figures in brackets indicate the literature references at the end of this paper.

Several central heat distribution systems have been built in regions where soils are permanently frozen (permafrost) or where soils are normally thawed but freeze from the surface downward during the winter (seasonal frost). Some of these soils can be frozen or thawed without significantly affecting their properties but many expand upon freezing, then assume the consistency of a child's mud pie upon thawing. Various buried, on-grade and elevated systems have been employed in a wide variety of soils to distribute heat from central plants. Several will be discussed in this paper. Their locations are presented in figure 1.

2. Thule Air Base, Greenland

Facilities at the United States Air Base at Thule, Greenland are founded on permafrost which contains about 50% ice by volume. The permafrost at Thule extends to a depth of about 1,300 ft [2]. All utilities, including steam and condensate return lines, are routed on timber blocks placed on the ground as shown in figure 2. Expensive elevated road crossings are often necessary. Substantial insulation is required to prevent freezing of these lines. Heating cables offer additional thermal protection and their maintenance and replacement is a continuing task. A conscientious program of preventative maintenance is conducted during each summer to minimize winter repairs which are complicated by snow drifts, high winds, darkness and extreme cold. Melt water has infiltrated into exposed but not tightly-sealed electrical boxes and conduits, then frozen and caused insulation, heating cable, and electrical failures.

It would have been more expensive to group the separate exposed lines in above-grade utilidors. However, within a utilidor the lines would offer each other thermal protection and the reliability of the system would be improved. Since construction in 1950, the utility distribution system at Thule has required substantial maintenance and repair but no major failures have occurred and, from the users viewpoint excellent performance has been achieved.

3. Inuvik, Northwest Territories, Canada

Ice-rich permafrost also exists at Inuvik where utilities are distributed in an elevated utilidor. The significance of the utilidor on shaping the community is evident in figure 3. A cross-section of this utilidor is shown in figure 4. Heat losses from insulated central heating lines provide thermal protection for water lines and sewers also routed in the insulated structure. In some areas, piles supporting the utilidor have heaved upward during annual freezing of the active layer. Gaps were then created between wall sections and access doors would no longer seal tightly. Cold air infiltrated the utilidor and caused several freezeups.

At first the utilidor was a symbol of reliable winter heat, "running" water and other amenities not previously enjoyed by the community. With time, attitudes have changed. Some users now direct their comments at the unsightly nature of the utilidor and the traffic problems which it creates. However, such comments must be taken in light of the fact that few Arctic civilian communities possess as reliable and efficient a utility distribution system as does Inuvik.

4. Godthaab, Greenland

Perhaps the utilidor at Inuvik is an obstruction to the movement of individuals and vehicles. However, there are other elevated utilidors that facilitate movement of individuals in a community. Figure 5 shows one utilidor which also serves as a staircase in Greenland's rocky coastal capitol of Godthaab. Permafrost does not exist at Godthaab. Utilities are routed above the rock to avoid costly blasting required for burial below seasonal frost.

5. Cape Lisburne, Air Force Station, Alaska

Ice-rich permafrost exists at Cap Lisburne. At this station an elevated walkway-utilidor interconnects buildings and an insulated utility space exists below each elevated facility (fig. 6). The buildings and utilidors are elevated not only to prevent thawing of the permafrost but also to minimize the amount of snow drifting at this windy site. Figure 7 shows snow drifting at the intersection of the new elevated

walkway-utilidor and an old on-grade structure. The ground below and in the lee of the elevated structure is bare of snow while the on-grade structure is engulfed in drifts.

In the walkway-utilidor, heat losses from steam lines warm other utilities and the walkway above. When repairs are necessary, workers enter the utilidor (fig. 8) by way of hatches in the walkway floor. Affecting repairs is no more difficult in winter than in summer.

The insulated utility space below each structure and any uninsulated drains therein are warmed by heat lost from the insulated steam lines routed in that space. The first floor above is not insulated and warmth from the utility space below also eliminates chronic cold floor problems experienced by many elevated buildings in the cold regions.

6. City of Nome, Alaska

Warm utilities can be distributed in buried utilidors in permafrost that will remain stable upon thawing. However, the bulb of thaw created around such a buried utilidor can introduce drainage problems. The wooden tunnels built below the streets of Nome do not contain central heating lines, only circulating water lines and wood stave sewers. Heat exchangers at the central power plant warm the water to prevent freezing. Heat lost from the uninsulated water lines has thawed a bulb of soil surrounding the utilidor as shown in figure 9. In the spring, surface water finds its way into the thawed bulb and rises to the level of the utilidor which is not watertight. For several weeks, the tunnels become an impromptu series of storm drains. Main tunnels are three feet by five feet in cross-section but most tunnels are smaller. Intersections are extremely difficult to negotiate and maintenance is complicated, especially during the spring.

Because the permafrost contains some ice, progressive thaw has caused the utilidor to continually shift. The designers provided for this by suspending the gravity sewer on threaded rods to permit periodic realignment.

The Nome utilidor is one of few buried utilidors that exists where central heating is not present.

7. Resolute Bay, Northwest Territories, Canada

The Resolute Bay townsite contains buried utility tunnels which are not watertight but are instead filled with a granular hydrophobic insulation. Mr. George Jacobsen of the Tower Company (1961) Limited indicates that the design shown in figure 10 is performing very well.

8. Tin City Air Force Station, Alaska

Small buried utilidors have been built at military facilities in Alaska. One example is the buried concrete utilidor at the Tin City Air Force Station. That utilidor is built in stabilized permafrost and is shown in figure 11. Just below the surface it is subjected to tempered environmental stresses, does not interfere with the movement of personnel, vehicles or snow control equipment, and is reasonably accessable for repair. Precast concrete covers (stockpiled to the right of the utilidor in fig. 11) are set in mastic to seal the box and prevent groundwater problems such as those mentioned for Nome. The bulb of thaw around this near-surface utilidor is rather small and the utilidor is stable.

9. Fort Wainwright, Fairbanks, Alaska

Several large buried utilidors were constructed in stable Alaskan permafrost by the U.S. military in the 1940's and 1950's (fig. 12). The interior of the walk-through utilidor constructed at Fort Wainwright (then Ladd Field) is shown in figure 13.

Routing of steam and condensate lines was a principal reason for choosing utilidors. Accessibility for maintenance and repair, lack of surface obstructions, esthetics and dual use as a passageway were used to justify burial. Manholes contain louvers, but

the amount of ventilation is slight; intended only to provide fresh air for personnel using the passageway. Even when outside temperatures are below -40°F, coats are not needed when walking in the utility tunnel. At times, the utilidor is uncomfortably warm. The tunnels are clean, well lit and dry. Watertight construction was used throughout and as a contingency, drains and pumps were also provided. Except during the Fairbanks flood of 1967 when most of Fort Wainwright was underwater, the utilidors have been essentially dry. During that flood they were filled with water. Magnesia insulation was ruined and major repairs were required. One unanchored sewer line floated free and was replaced but other pipelines survived the flood undamaged.

Steam and condensate return lines are insulated. Experience has shown that intense heat losses from uninsulated steam lines can overheat cold water and dry out sewage in nearby lines.

Large buried utilidors are rather expensive. Perhaps the one shown in figure 12 would cost about $2,000 per foot today in Alaska.

10. Siberia, USSR

Since World War II, several large communities have been constructed in the Soviet North. At Noril'sk two-story walk-through reinforced-concrete buried utilidors were incorporated into the city plan [3]. Before construction, a zone of ice-rich permafrost surrounding the utilidor was prethawed and either compacted or replaced with more stable material. To prevent steam line heat losses from further degrading permafrost, all utilidors were ventilated. Numerous air intake shafts and exhaust ports were required. Air temperature in the utilidor was maintained below freezing during the winter to refreeze any soil thawed during the warm summer months. Utility lines are individually insulated and domestic water is circulated in looped mains to prevent freezing. The Soviet ventilated utilidors are considered quite expensive but apparently they serve their intended purpose very well since similar utilidors have been built recently in Mirny and other communities. Slipchenko [4] presents cross-sectional details of several utilidors in Noril'sk, Mirny and Yakutsk.

During July of 1973, I attended the Second International Conference on Permafrost in Yakutsk, USSR and viewed residential and industrial construction there and in Mirny. In the city of Yakutsk small wooden residences are being replaced with pre-fabricated concrete, four-story apartment buildings elevated above the permafrost on concrete piles. Apartments are grouped around central heating plants from which utilities are distributed in precast concrete utilidors. Some of the three-feet deep, six-feet wide precast sections are nearly buried as shown in figure 14. Others are mostly above grade. The roof panels serve as a walkway above the winter snows and the spring mud. Cement grout is used to seal gaps between the wall and the roof. In many areas the cement had cracked away. I expect that a significant amount of heat is lost by air leakage.

Between apartments, some utilidors are elevated on piles (fig. 15). Utility mains are routed within the lower story of the structure. The upper four stories are apartments.

None of the above-mentioned utilidors seen in Yakutsk were ventilated. Similar unventilated utilidors were viewed in Mirny where large, buried, ventilated utility tunnels are also present.

In Mirny, a model was viewed of a proposed settlement for 5,000 people to be built about 375 miles north of Mirny at a site where mineral resources are to be exploited. The community will consist of less than a dozen interconnected buildings, eight of which are five-story apartments, each having 180 units (fig. 16). Other buildings include a public center, a sports arena, a school, and shops. A separate power plant (lower right corner in fig. 16) will supply heat and electricity to the community. Utilities will be routed in the passageways which interconnect the structures. This plan was developed to reduce problems and costs associated with utility distribution and snow control and to permit individuals to move about in the community without the requirement for frequent interfacing with the severe Siberian winter environment.

11. References

[1] American Public Works Association, (1972) Proceedings: Conference on Engineering Utility Tunnels in Urban Areas, APWA Special Report No. 41.

[2] Ball, D.G. and I.H. Call (1966) U.S. Sanitary and hydraulic engineering practice in Greenland, p. 409-412 in Permafrost: Proceedings of an International conference, National Academy of Science, Washington, D.C.

[3] Porkhaev, G.V. (1959) Principles of Geocryology, Engineering Geocryology, Underground Utility Lines, Academy of Sciences of the USSR, V.A. Oloruchev Institute of Permafrost Studies, English translation by National Research Council of Canada TT1221, 1965.

[4] Slipchenko, W. (1972) Siberia, 1971, A report on the Visit of the Honorable Jean Chretien, Minister of Indian Affairs and Northern Development and Official Delegation to the Soviet Union. Indian Affairs and Northern Development Publication QS-1179-000-EE-A-1.

[5] Alter, A.J. (1969) Water Supply in Cold Regions, U.S. Army Cold Regions Research and Engineering Laboratory (USACRREL) Monograph III-C5b.

FIGURES

Figure 1 Northern areas discussed in this paper.

Figure 2 Surface pipelines at Thule AB, Greenland, Note the road crossing.

Figure 3 Airphoto of Inuvik, NWT (Photo courtesy of Dr. William Smith, University of Wisconsin).

Figure 4 The elevated utilidor at Inuvik, NWT (after Alter, Ref. 5).

Figure 5 A stairway-utilidor above rock at Godthaab, Greenland.

Figure 6 The elevated walkway-utilidor and the warm utility space below the first floor of the elevated composite building at Cape Lisburne, Alaska.

Figure 7 Variation in snow drifting in the lee of on-grade and elevated sections of the walkway-utilidor at Cape Lisburne, Alaska.

Figure 8 Within the utilidor at Cape Lisburne, Alaska.

Figure 9 Bulb of thaw created around a warm buried utilidor in permafrost. Drainage problems may result (after Alter, Ref. 5).

Figure 10 Townsite utilidor at Resolute Bay, NWT (after design drawings by the Tower Co. (1961) Ltd.).

Figure 11 The small buried utilidor at Tin City, Alaska (Photo courtesy of R. Jacobs, USAF Alaskan Air Command).

Figure 12 A large walk-through buried utilidor (after Alter, Ref. 5).

Figure 13 Interior of the walk-through utilidor at Ft. Wainwright, Alaska (Photo by R. Redfield, USACRREL).

Figure 14 Precast concrete utilidor in Yakutsk, USSR.

Figure 15 An elevated utilidor constructed on piles between apartment buildings in Yakutsk, USSR.

Figure 16 Model of a community to be built north of Mirny, USSR (Photo courtesy of Howard Pettibone, U.S. Bureau of Mines).

Figure 1 Nothern areas discussed in this paper.

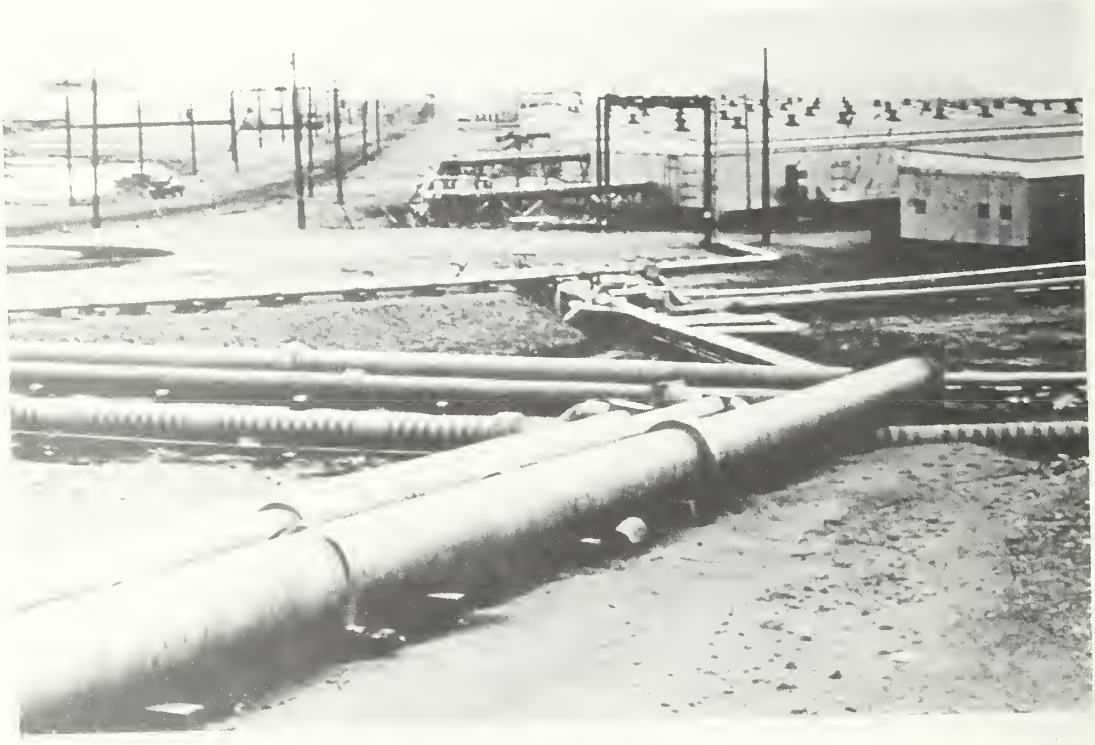

Figure 2 Surface pipelines at Thule AB, Greenland, Note the road crossing.

Figure 3 Airphoto of Inuvik, NWT (Photo courtesy of Dr. William Smith, University of Wisconsin).

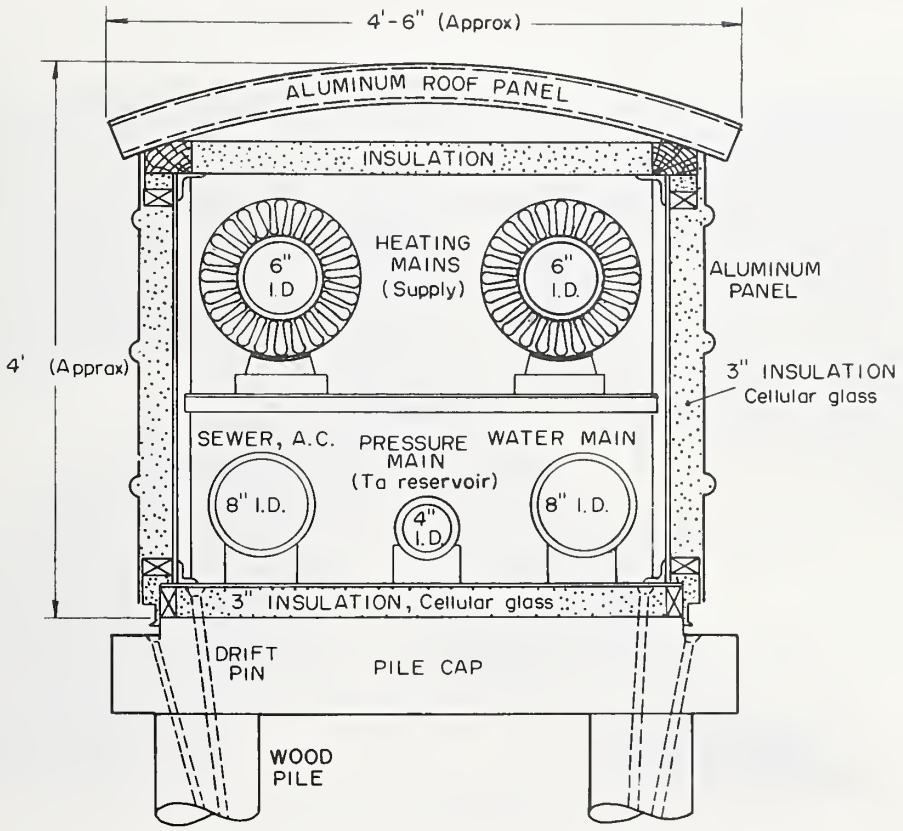

Figure 4 The elevated utilidor at Inuvik, NWT (after Alter, Ref. 5).

Figure 5 A stairway-utilidor above rock at Godthaab, Greenland.

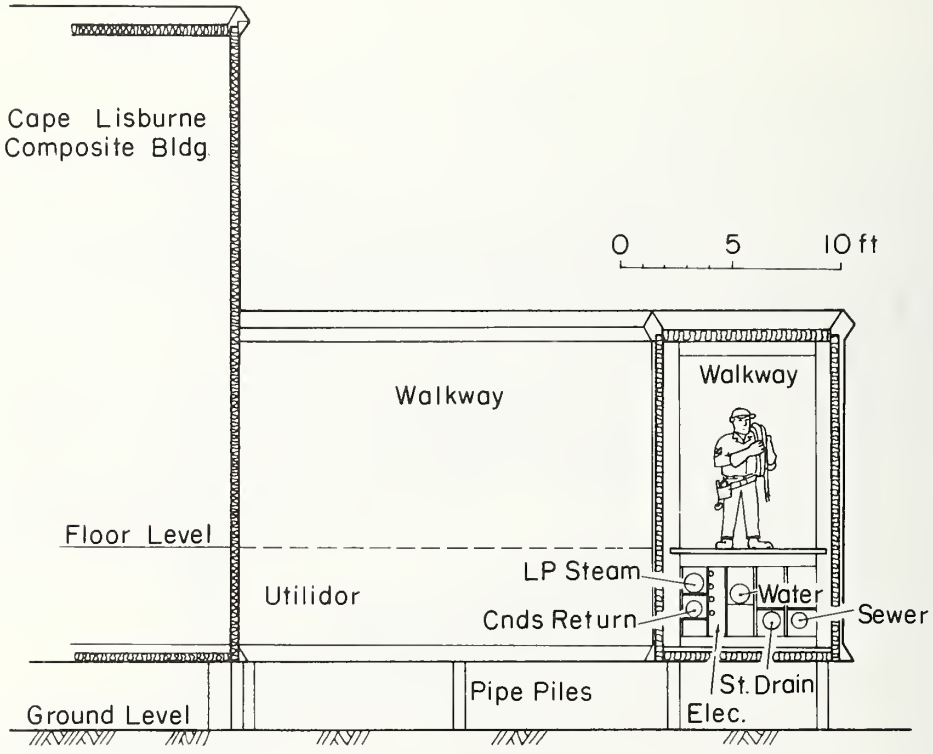

Figure 6 The elevated walkway-utilidor and the warm utility space below the first floor of the elevated composite building at Cape Lisburne, Alaska.

Figure 7 Variation in snow drifting in the lee of on-grade and elevated sections of the walkway-utilidor at Cape Lisburne, Alaska.

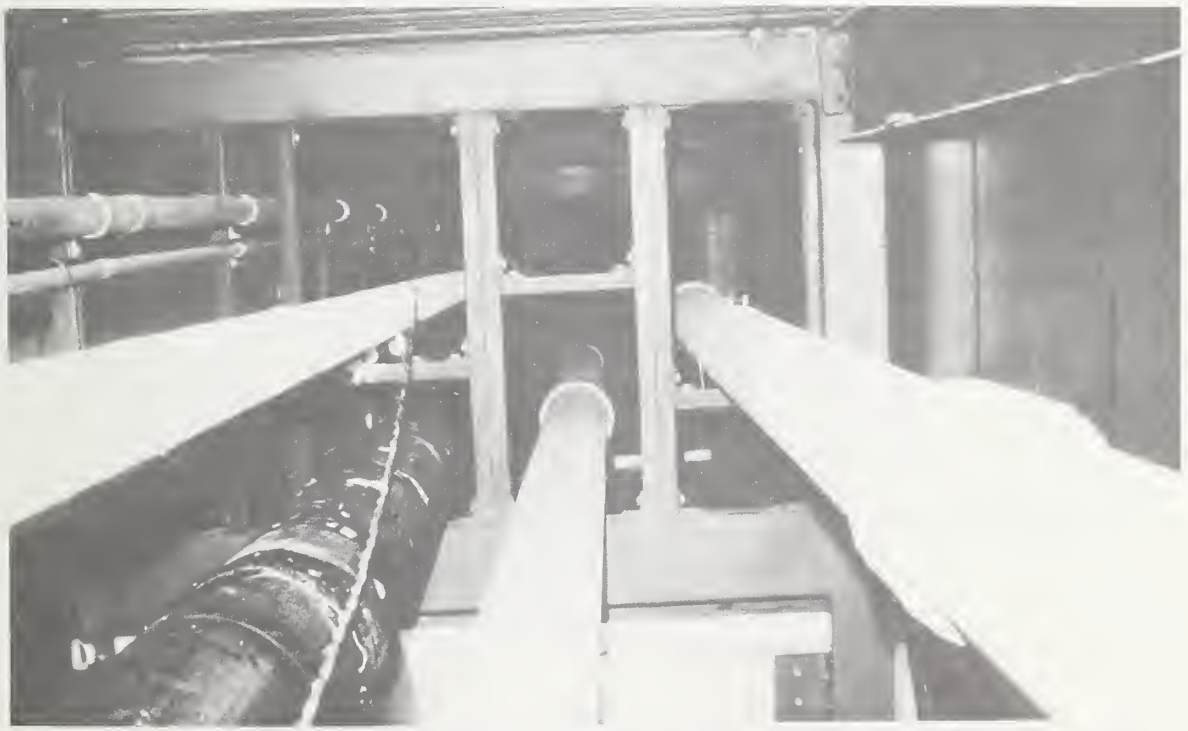

Figure 8 Within the utilidor at Cape Lisburne, Alaska.

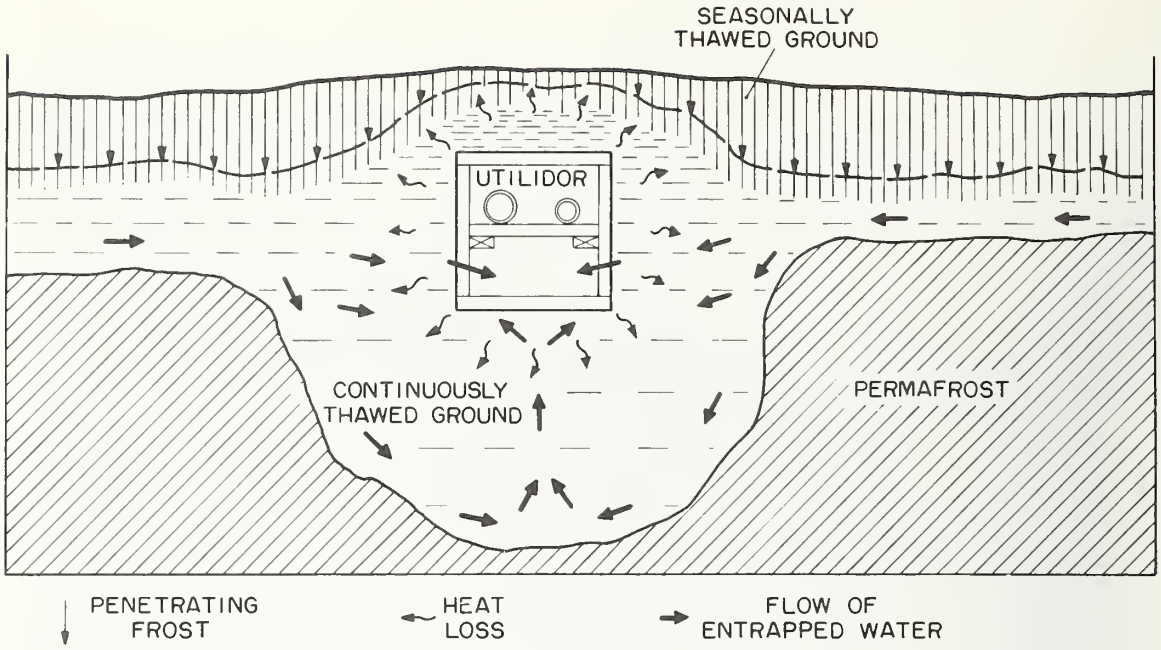

Figure 9 Bulb of thaw created around a warm buried utilidor in permafrost. Drainage problems may result (after Alter, Ref. 5).

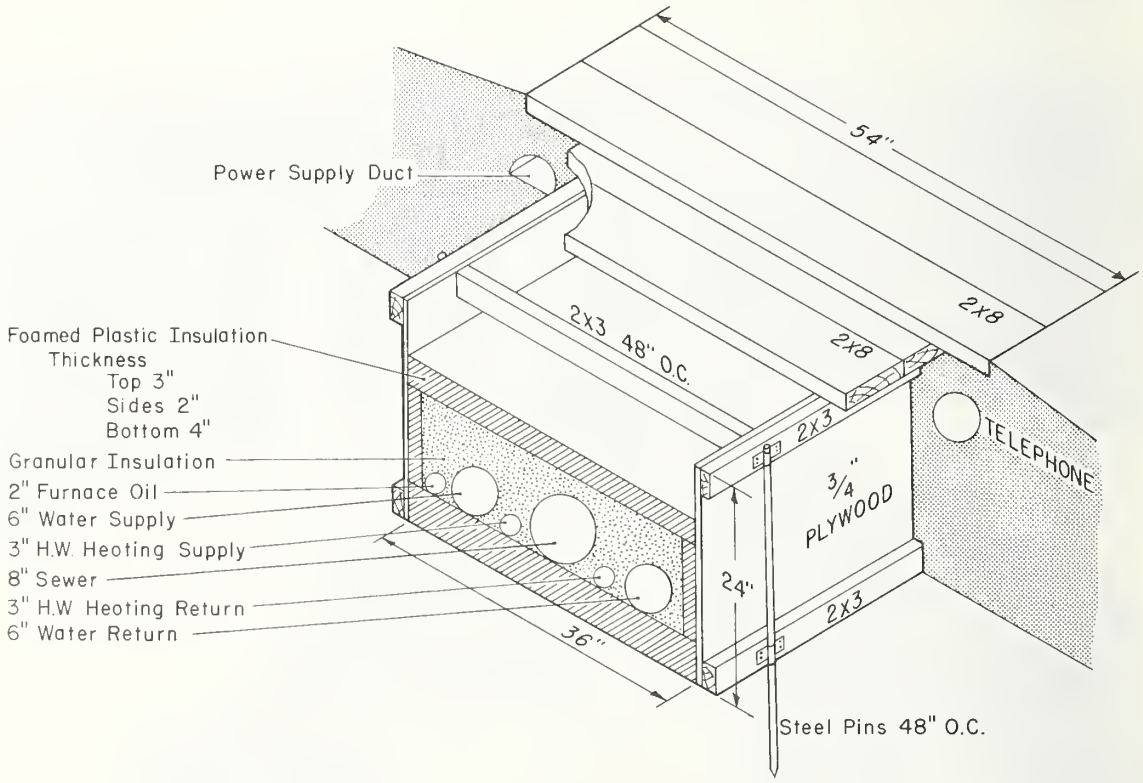

Figure 10 Townsite utilodor at Resolute Bay, NWT (after design drawings by the Tower Co. (1961) Ltd).

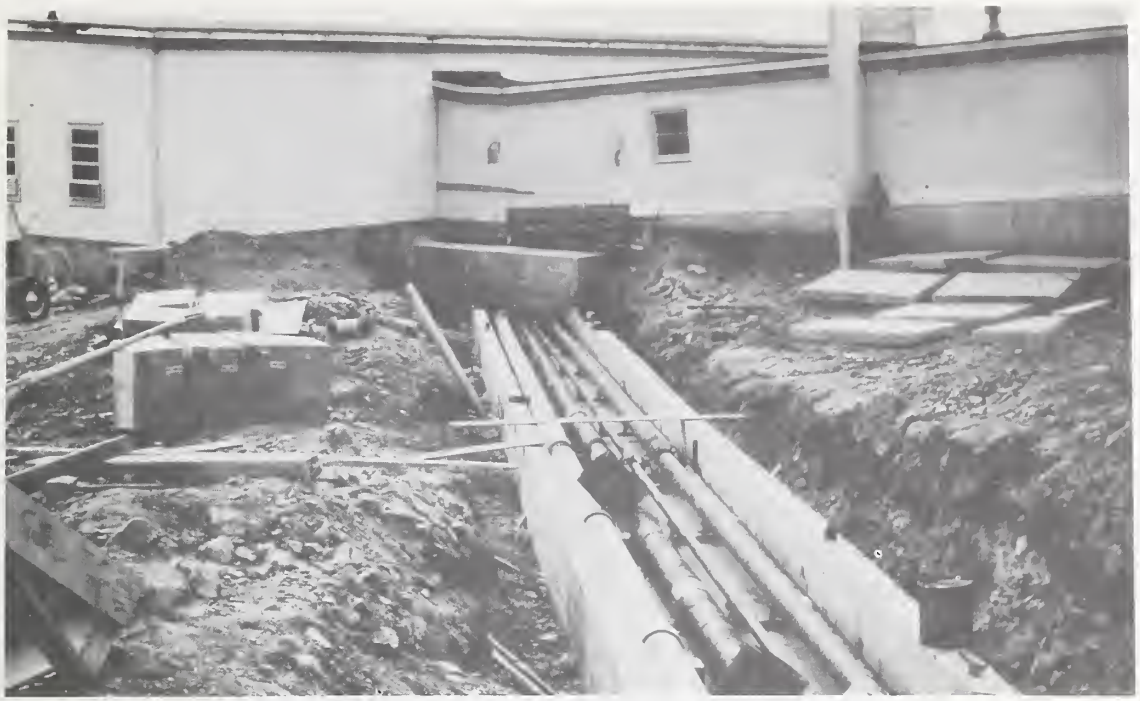

Figure 11 The small buried utilidor at Tin City, Alaska (Photo courtesy of R. Jacobs, USAF Alaskan Air Command).

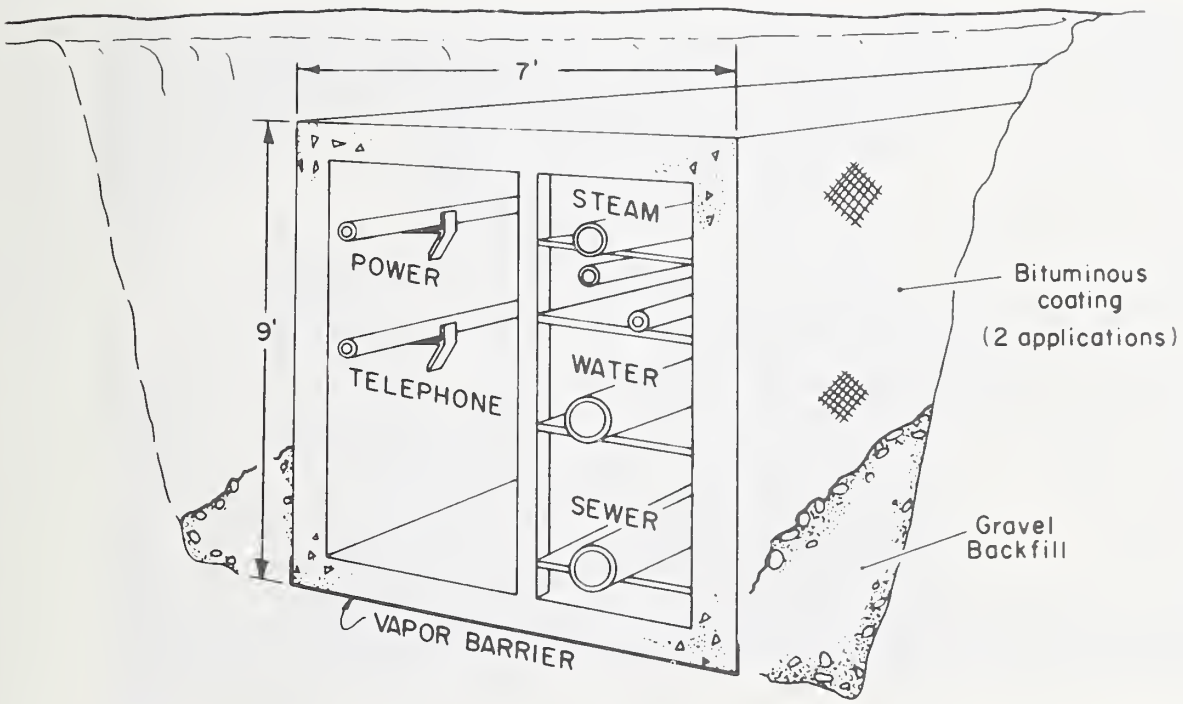

Figure 12 A large walk-through buried utilidor (after Alter, Ref. 5).

Figure 13 Interior of the walk-through utilidor at Ft. Wainwright, Alaska (Photo by R. Redfield, USACRREL).

Figure 14 Precast concrete utilidor in Yakutsk, USSR.

Figure 15 An elevated utilidor constructed on piles between apartment buildings in Yakutsk, USSR.

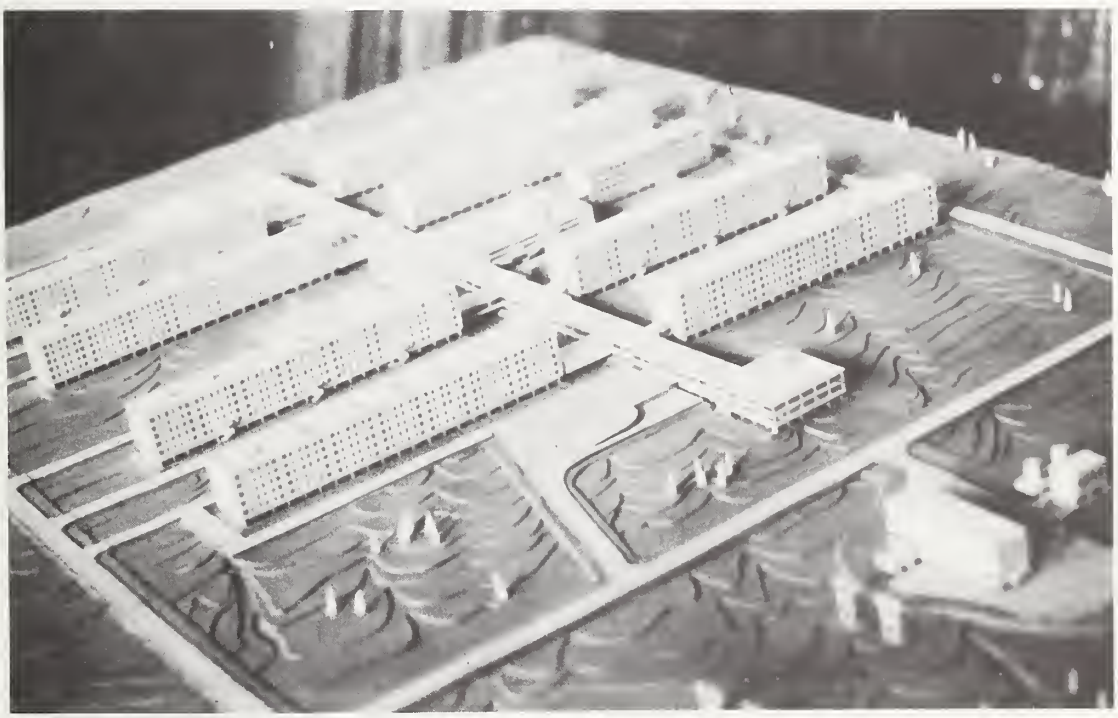

Figure 16 Model of a community to be built north of Mirny, USSR (Photo courtesy of Howard Pettibone, U.S. Bureau of Mines).

NBS-114A (REV. 7-73)

U.S. DEPT. OF COMM. BIBLIOGRAPHIC DATA SHEET	1. PUBLICATION OR REPORT NO. NBS BSS 66	2. Gov't Accession No.	3. Recipient's Accession No.

4. TITLE AND SUBTITLE

Underground Heat and Chilled Water Distribution Systems

5. Publication Date: May 1975

6. Performing Organization Code

7. AUTHOR(S)
Tamami Kusuda

8. Performing Organ. Report No.

9. PERFORMING ORGANIZATION NAME AND ADDRESS

NATIONAL BUREAU OF STANDARDS
DEPARTMENT OF COMMERCE
WASHINGTON, D.C. 20234

10. Project/Task/Work Unit No.
4624136

11. Contract/Grant No.

12. Sponsoring Organization Name and Complete Address (*Street, City, State, ZIP*)
Building Research Institute
National Bureau of Standards
ASHRAE National Capital Chapter
Association of Physical Plant Administrator

13. Type of Report & Period Covered
Final

14. Sponsoring Agency Code

15. SUPPLEMENTARY NOTES

Library of Congress Catalog Card Number: 75-619005

16. ABSTRACT (*A 200-word or less factual summary of most significant information. If document includes a significant bibliography or literature survey, mention it here.*)

This publication contains the keynote address and all the technical papers presented during the Symposium on Underground Heat and Chilled Water Distribution Systems, which was held on November 26 and 27, 1973 in Washington, D.C.

The Symposium was sponsored jointly by the National Bureau of Standards, the National Capital Chapter of the American Society of Heating, Refrigerating and Air-Conditioning Engineers, the Building Research Institute and the Association of Physical Plant Administrators.

The subject matter covered in the papers includes energy, economics, design criteria, heat transfer, corrosion protection, specification, operation, and maintenance related to underground pipes.

17. KEY WORDS (*six to twelve entries; alphabetical order; capitalize only the first letter of the first key word unless a proper name; separated by semicolons*)

Corrosion of underground pipes; district heating; hot and chilled water systems; insulation of underground pipes; specifications for underground systems

18. AVAILABILITY

☒ Unlimited

☐ For Official Distribution. Do Not Release to NTIS

☒ Order From Sup. of Doc., U.S. Government Printing Office Washington, D.C. 20402, SD Cat. No. C13. 29:2/66

☐ Order From National Technical Information Service (NTIS) Springfield, Virginia 22151

19. SECURITY CLASS (THIS REPORT)
UNCLASSIFIED

21. NO. OF PAGES
146

20. SECURITY CLASS (THIS PAGE)
UNCLASSIFIED

22. Price

USCOMM-DC 29042-P74

NBS TECHNICAL PUBLICATIONS

PERIODICALS

JOURNAL OF RESEARCH reports National Bureau of Standards research and development in physics, mathematics, and chemistry. It is published in two sections, available separately:

• Physics and Chemistry (Section A)

Papers of interest primarily to scientists working in these fields. This section covers a broad range of physical and chemical research, with major emphasis on standards of physical measurement, fundamental constants, and properties of matter. Issued six times a year. Annual subscription: Domestic, $17.00; Foreign, $21.25.

• Mathematical Sciences (Section B)

Studies and compilations designed mainly for the mathematician and theoretical physicist. Topics in mathematical statistics, theory of experiment design, numerical analysis, theoretical physics and chemistry, logical design and programming of computers and computer systems. Short numerical tables. Issued quarterly. Annual subscription: Domestic, $9.00; Foreign, $11.25.

DIMENSIONS/NBS (formerly Technical News Bulletin)—This monthly magazine is published to inform scientists, engineers, businessmen, industry, teachers, students, and consumers of the latest advances in science and technology, with primary emphasis on the work at NBS. The magazine highlights and reviews such issues as energy research, fire protection, building technology, metric conversion, pollution abatement, health and safety, and consumer product performance. In addition, it reports the results of Bureau programs in measurement standards and techniques, properties of matter and materials, engineering standards and services, instrumentation, and automatic data processing.

Annual subscription: Domestic, $9.45; Foreign, $11.85.

NONPERIODICALS

Monographs—Major contributions to the technical literature on various subjects related to the Bureau's scientific and technical activities.

Handbooks—Recommended codes of engineering and industrial practice (including safety codes) developed in cooperation with interested industries, professional organizations, and regulatory bodies.

Special Publications—Include proceedings of conferences sponsored by NBS, NBS annual reports, and other special publications appropriate to this grouping such as wall charts, pocket cards, and bibliographies.

Applied Mathematics Series—Mathematical tables, manuals, and studies of special interest to physicists, engineers, chemists, biologists, mathematicians, computer programmers, and others engaged in scientific and technical work.

National Standard Reference Data Series—Provides quantitative data on the physical and chemical properties of materials, compiled from the world's literature and critically evaluated. Developed under a world-wide program coordinated by NBS. Program under authority of National Standard Data Act (Public Law 90-396).

NOTE: At present the principal publication outlet for these data is the Journal of Physical and Chemical Reference Data (JPCRD) published quarterly for NBS by the American Chemical Society (ACS) and the American Institute of Physics (AIP). Subscriptions, reprints, and supplements available from ACS, 1155 Sixteenth St. N. W., Wash. D. C. 20056.

Building Science Series—Disseminates technical information developed at the Bureau on building materials, components, systems, and whole structures. The series presents research results, test methods, and performance criteria related to the structural and environmental functions and the durability and safety characteristics of building elements and systems.

Technical Notes—Studies or reports which are complete in themselves but restrictive in their treatment of a subject. Analogous to monographs but not so comprehensive in scope or definitive in treatment of the subject area. Often serve as a vehicle for final reports of work performed at NBS under the sponsorship of other government agencies.

Voluntary Product Standards—Developed under procedures published by the Department of Commerce in Part 10, Title 15, of the Code of Federal Regulations. The purpose of the standards is to establish nationally recognized requirements for products, and to provide all concerned interests with a basis for common understanding of the characteristics of the products. NBS administers this program as a supplement to the activities of the private sector standardizing organizations.

Federal Information Processing Standards Publications (FIPS PUBS)—Publications in this series collectively constitute the Federal Information Processing Standards Register. Register serves as the official source of information in the Federal Government regarding standards issued by NBS pursuant to the Federal Property and Administrative Services Act of 1949 as amended, Public Law 89-306 (79 Stat. 1127), and as implemented by Executive Order 11717 (38 FR 12315, dated May 11, 1973) and Part 6 of Title 15 CFR (Code of Federal Regulations).

Consumer Information Series—Practical information, based on NBS research and experience, covering areas of interest to the consumer. Easily understandable language and illustrations provide useful background knowledge for shopping in today's technological marketplace.

NBS Interagency Reports (NBSIR)—A special series of interim or final reports on work performed by NBS for outside sponsors (both government and non-government). In general, initial distribution is handled by the sponsor; public distribution is by the National Technical Information Service (Springfield, Va. 22161) in paper copy or microfiche form.

Order NBS publications (except NBSIR's and Bibliographic Subscription Services) from: Superintendent of Documents, Government Printing Office, Washington, D.C. 20402.

BIBLIOGRAPHIC SUBSCRIPTION SERVICES

The following current-awareness and literature-survey bibliographies are issued periodically by the Bureau:

Cryogenic Data Center Current Awareness Service

A literature survey issued biweekly. Annual subscription: Domestic, $20.00; foreign, $25.00.

Liquefied Natural Gas. A literature survey issued quarterly. Annual subscription: $20.00.

Superconducting Devices and Materials. A literature survey issued quarterly. Annual subscription: $20.00. Send subscription orders and remittances for the preceding bibliographic services to National Technical Information Service, Springfield, Va. 22161.

Electromagnetic Metrology Current Awareness Service Issued monthly. Annual subscription: $100.00 (Special rates for multi-subscriptions). Send subscription order and remittance to Electromagnetics Division, National Bureau of Standards, Boulder, Colo. 80302.

U.S. DEPARTMENT OF COMMERCE
National Bureau of Standards
Washington, D.C. 20234

OFFICIAL BUSINESS

Penalty for Private Use, $300

POSTAGE AND FEES PAID
U.S. DEPARTMENT OF COMMERCE
COM-215

FOURTH CLASS MAIL

U.S.MAIL